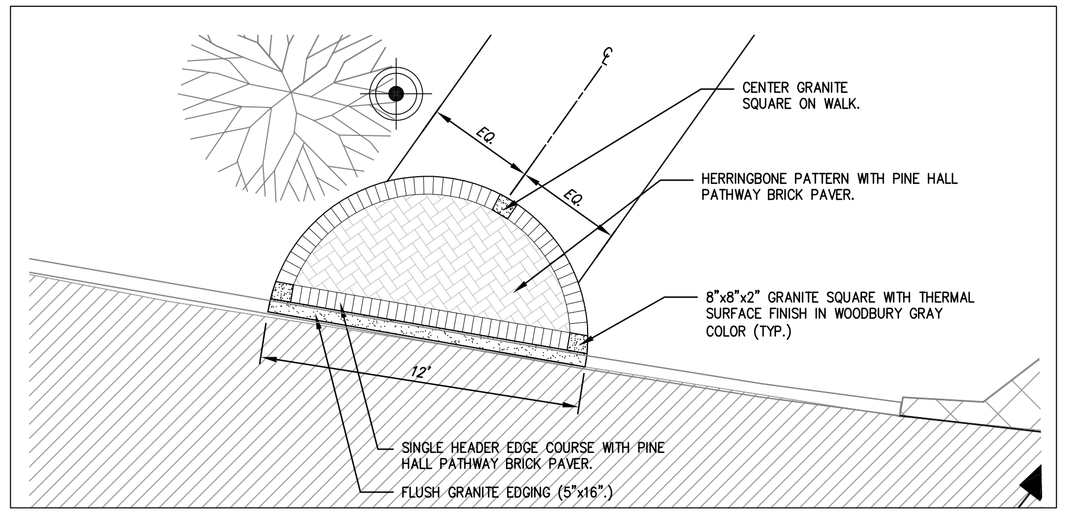

TYPICAL WALKWAY LANDING AREA PAVING PATTERN

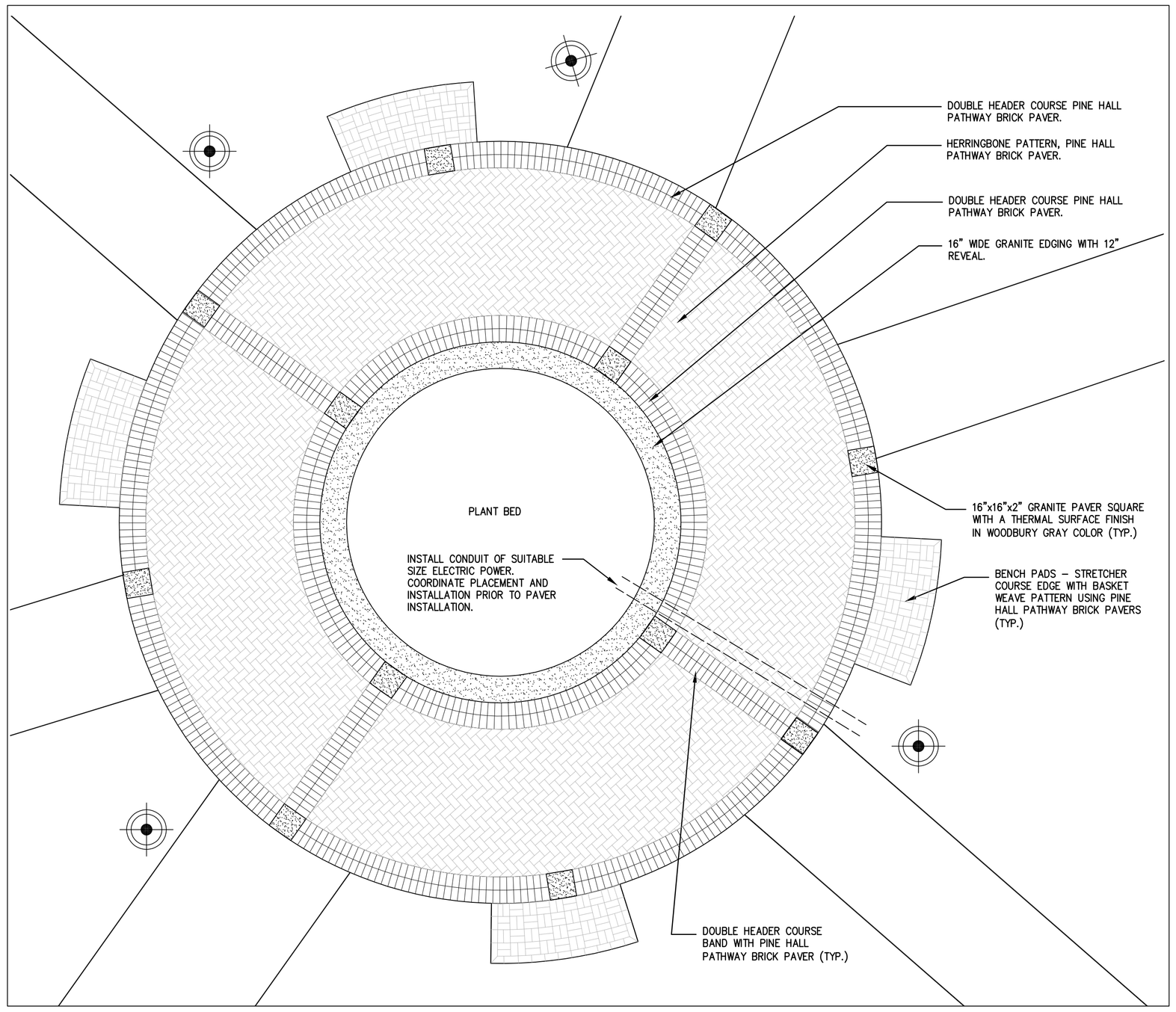

CIRCLE PAVING PATTERN ENLARGEMENT

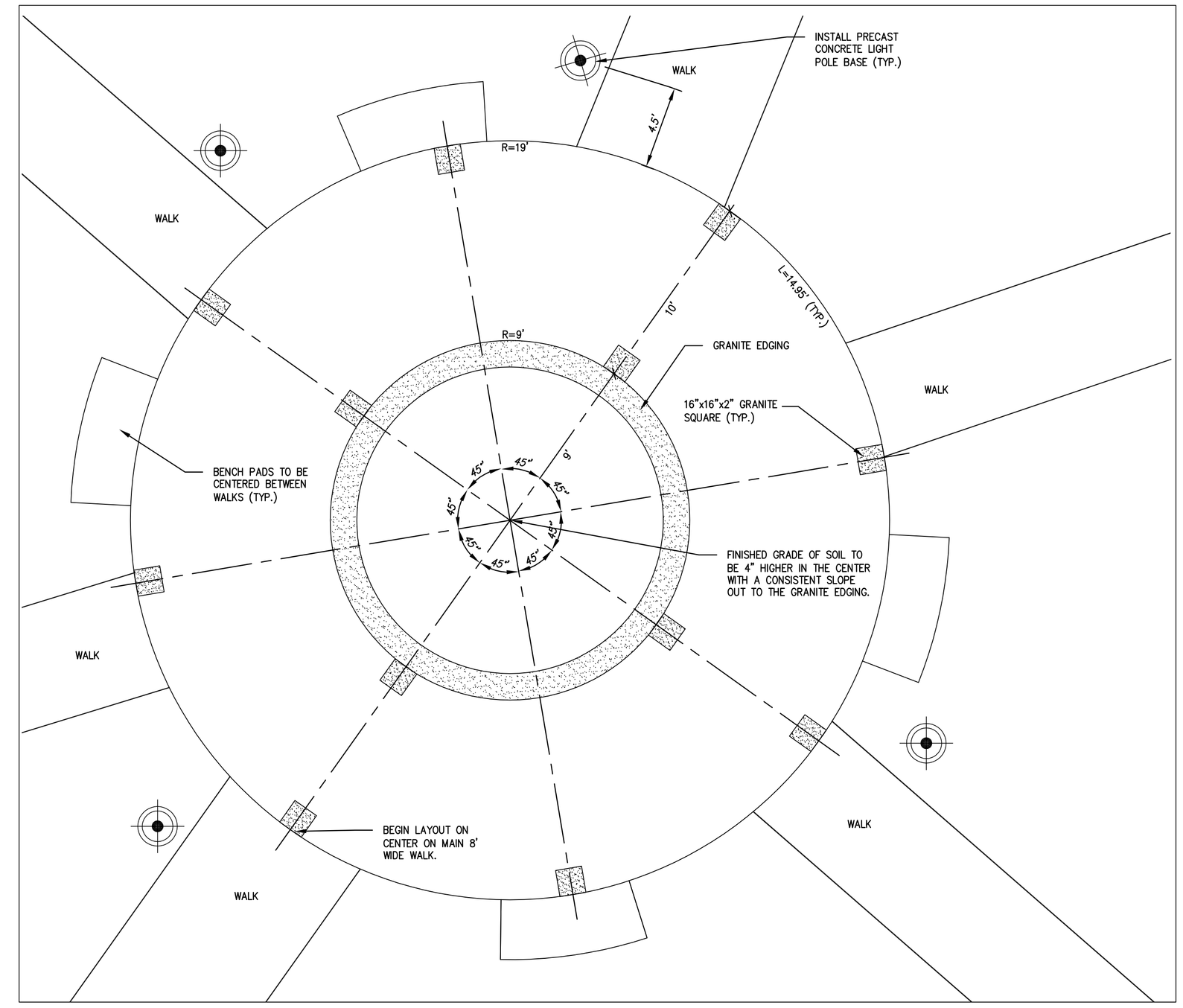

CIRCLE LAYOUT ENLARGEMENT

GRAPHIC SCALE

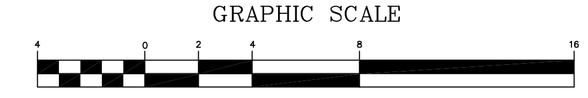

(IN FEET)
1 inch = 4 ft.

REV.	DATE	STATUS	BY	CHKD.	APPD.	REV.	DATE	STATUS	BY	CHKD.	APPD.
C	7/5/16	REVISED PER CITY OF PORTLAND COMMENTS AND RE-ISSUED	DEPT.	PBB	PBB						
B	6/8/16	ISSUED FOR CITY OF PORTLAND REVIEW	DEPT.	PBB	PBB						
A	5/23/14	ISSUED TO OWNER FOR REVIEW	DEPT.	PBB	PBB						

LICENSED LANDSCAPE ARCHITECT PETER B. BIEGEL No. 2624 STATE OF MAINE
7/5/16

LAND DESIGN SOLUTIONS
LAND PLANNING, SITE PLANNING & LANDSCAPE ARCHITECTURE
P.O. Box 316, 160 Longwoods Road, Cumberland, ME 04021 tel:(207) 934-1717

CLIENT & OWNER:
UNIVERSITY OF NEW ENGLAND
11 HILLS BEACH ROAD, BIDDEFORD, ME 04005

DESIGN: PBB
DRAWN: DEPT.
CHKD: PBB
DATE: SEPT. 2013
SCALE: 1/4"=1'

CAMPUS GREEN LANDSCAPE
UNE CAMPUS, STEVENS AVENUE, PORTLAND, MAINE

CIRCLE AND WALKWAY LANDING AREA ENLARGEMENTS PLAN

PROJ. NO.
DWG. NO. L-4
REV. C