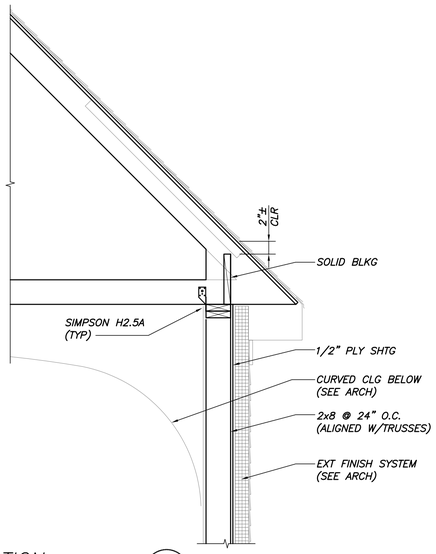

SECTION 1
3/4"=1'-0" S1.3

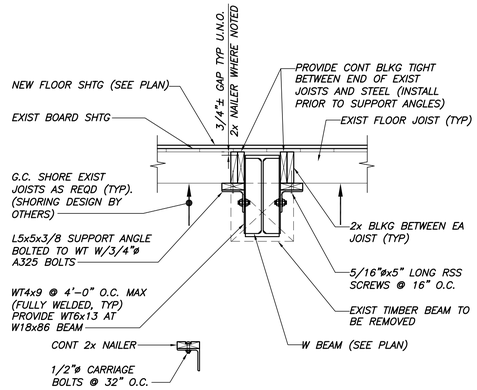

ANGLE NAILER DETAIL

SECTION 2
3/4"=1'-0" S1.3

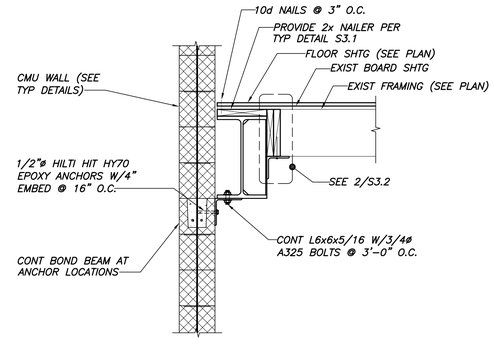

SECTION 3
3/4"=1'-0" S1.2

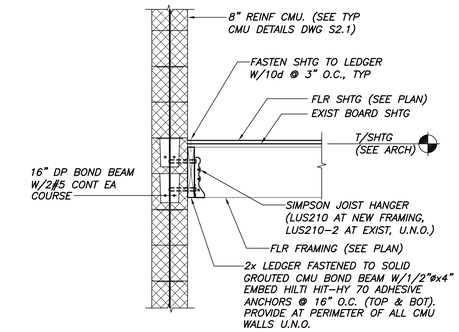

SECTION 4
3/4"=1'-0" S1.3

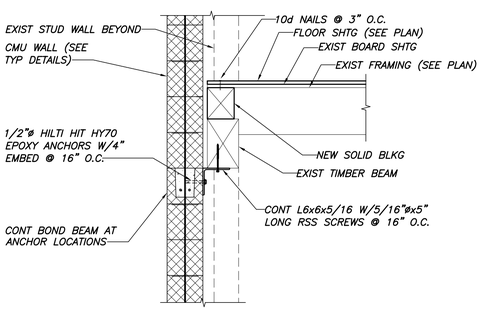

SECTION 5
3/4"=1'-0" S1.2

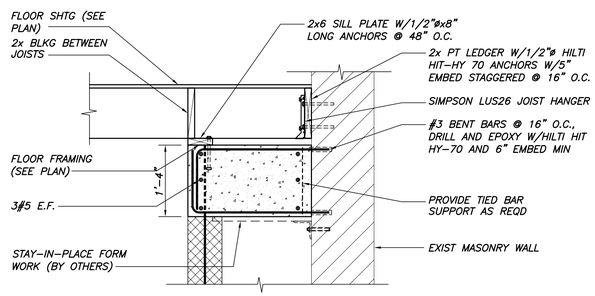

SECTION 6
3/4"=1'-0" S1.3

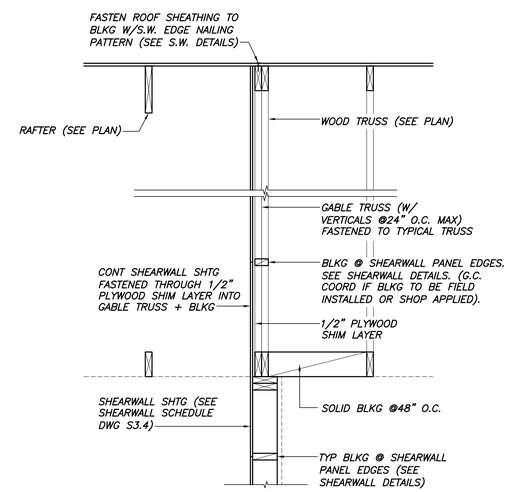

SECTION 9
3/4"=1'-0" S1.4

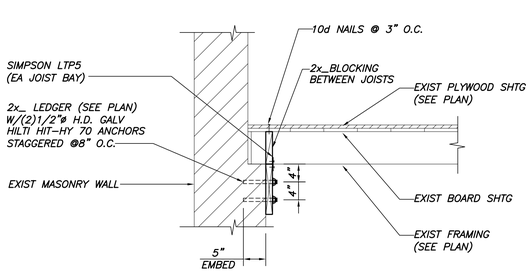

SECTION 7
3/4"=1'-0" S1.2-S1.3

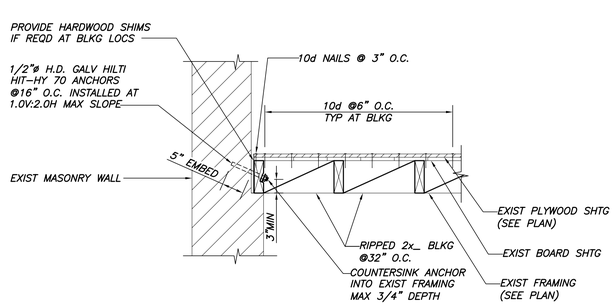

SECTION 8
3/4"=1'-0" S1.2-S1.3

65 NEWBURY STREET
PORTLAND, ME 04101
207.761.9000
info@portcityarch.com
WWW.PORTCITYARCH.COM

STATE OF MAINE
DANIEL S. BURNE
No. 10910
LICENSED
PROFESSIONAL ENGINEER

UNE
UNIVERSITY OF NEW ENGLAND

Allied Engineering
Structural Mechanical Electrical Commissioning

CONSIGLI
Est. 1905

BECKER
STRUCTURAL ENGINEERS

REVISIONS

No.	Description	Date
-	-	-

PERMIT SET

UNIVERSITY OF NEW ENGLAND
PORTLAND, MAINE

ALUMNI HALL RENOVATION

FRAMING SECTIONS & DETAILS

Project Number	3450
Date	May 1, 2015
Drawn by	MSK
Checked by	CGW

S3.2

Scale AS NOTED