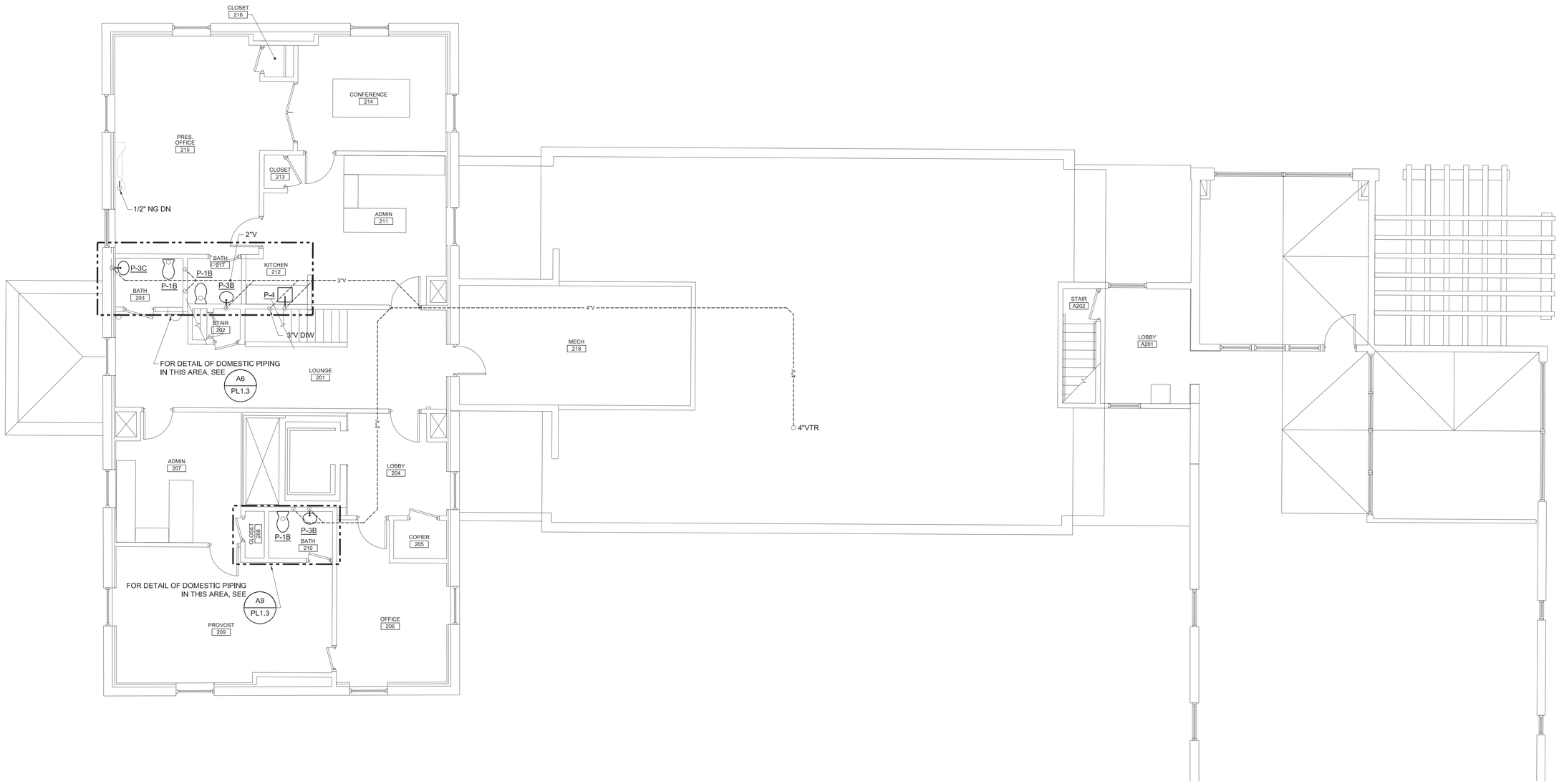

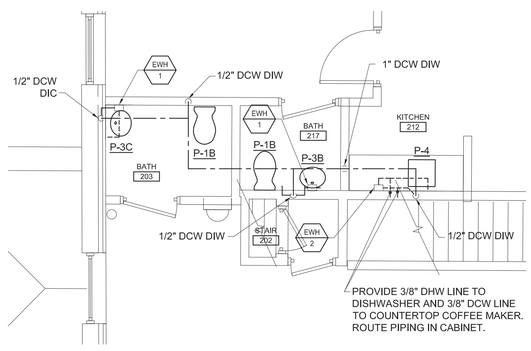

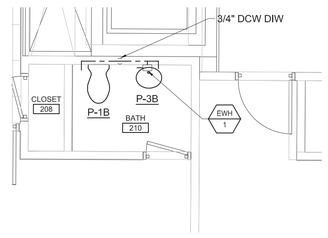

A1	PLUMBING PLAN ~ SECOND FLOOR
3/16" = 1'-0"	

A6	DETAIL ~ DOMESTIC PIPING PART PLAN
1/4" = 1'-0"	BATH 209, BATH 210 AND KITCHEN 204

A9	DETAIL ~ DOMESTIC PIPING PART PLAN
1/4" = 1'-0"	BATH 215

65 NEWBURY STREET
PORTLAND, ME 04101
207.761.9000
info@portcityarch.com
WWW.PORTCITYARCH.COM

Allied Engineering
Structural Mechanical Electrical Commissioning

160 Veranda Street
Portland, Maine 04103
T: 207.221.2260
F: 207.221.2266
Web: www.allied-eng.com

ALLIED PROJECT No: 14088

Graphic Scale: 1" 1/2" 0 1"

STATE OF MAINE
IAN A. MACDONALD
No. 6990
LICENSED
PROFESSIONAL ENGINEER

REVISIONS

No.	Description	Date

PERMIT SET

UNIVERSITY OF NEW ENGLAND
PORTLAND, MAINE

ALUMNI HALL RENOVATION

PLUMBING PLAN ~ SECOND FLOOR

Project Number	14525
Date	May 1, 2015
Drawn by	REW
Checked by	HAG

PL1.3

Scale AS NOTED

N:\Projects\2014\14088 ~ UNE - Alumni Hall\00 Drawing Files\14088M.dwg Apr 30, 2015 - 3:39pm