NOTE:
HANDRAILS TO EXTEND 12" HORIZ. AT THE TOP OF ALL STAIR RUNS (MIN.) AND CONTINUE TO SLOPE AT THE BOTTOM OF ALL STAIR RUNS FOR A HORIZ. DISTANCE OF 11" (MIN.). TYP.

NOTE:
CONTRACTOR TO VERIFY DIMENSIONS & EXISTING CONDITION & REPORT TO ARCHITECT FOR COORDINATION PURPOSES

NOTE:
CONTRACTOR TO FIELD VERIFY ALL FLOOR TO FLOOR DIMENSIONS

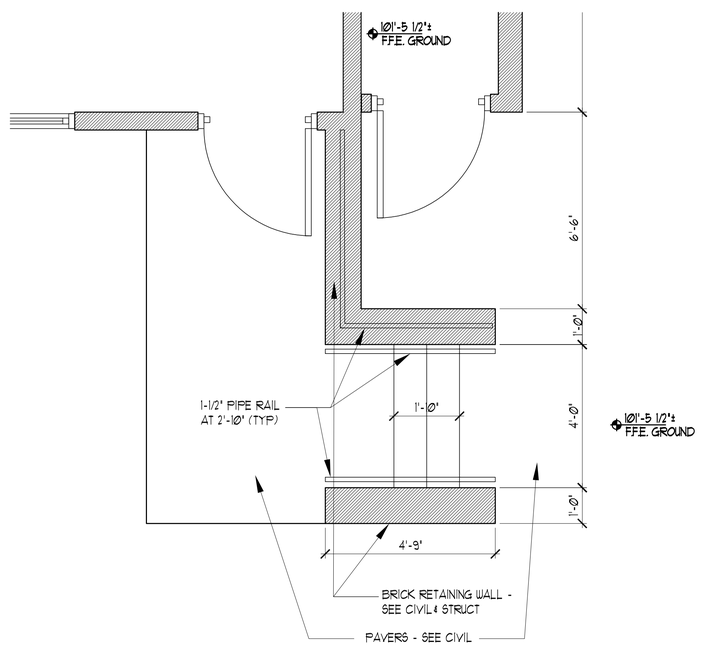


1 EXTERIOR STAIR PLAN

0 2'-0" SCALE: 1/2" = 1'-0"

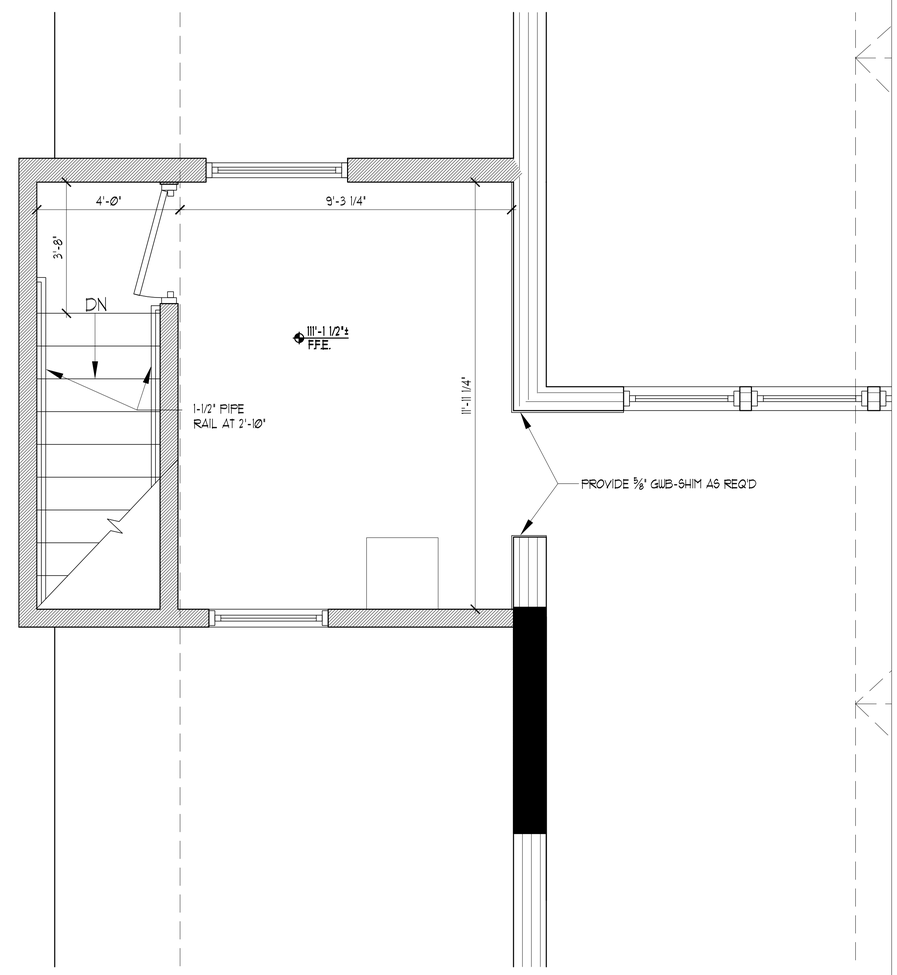


1 STAIR PLAN

0 2'-0" SCALE: 1/2" = 1'-0"


65 NEWBURY STREET
PORTLAND, ME 04101
207.761.9000
info@portcityarch.com
WWW.PORTCITYARCH.COM


REGISTERED ARCHITECT
LYTA SEMRAU
REG. 2607
STATE OF MAINE

UNE
UNIVERSITY OF NEW ENGLAND

Allied Engineering
Structural Mechanical Electrical Commissioning

CONSIGLI
Est. 1905

BECKER
STRUCTURAL ENGINEERS

PERMIT SET

REVISIONS

| No. | Description | Date |
|---|---|---|
| - | - | - |

UNIVERSITY OF NEW ENGLAND
PORTLAND, MAINE

ALUMNI HALL RENOVATION

# ABPLANALP STAIR PLAN

| | |
|---|---|
| Project Number | 14525 |
| Date | May 01, 2015 |
| Drawn by | JP TS SM AR |
| Checked by | LAS |

A4.5

Scale AS NOTED