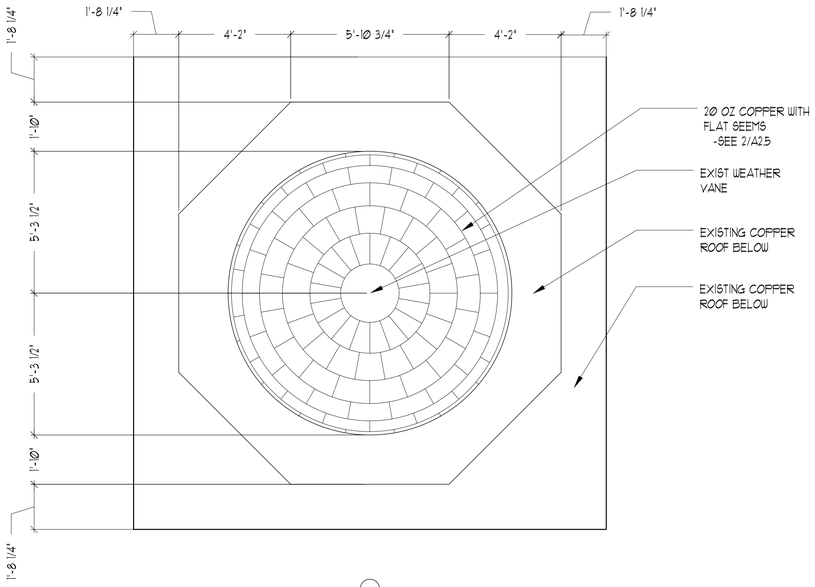

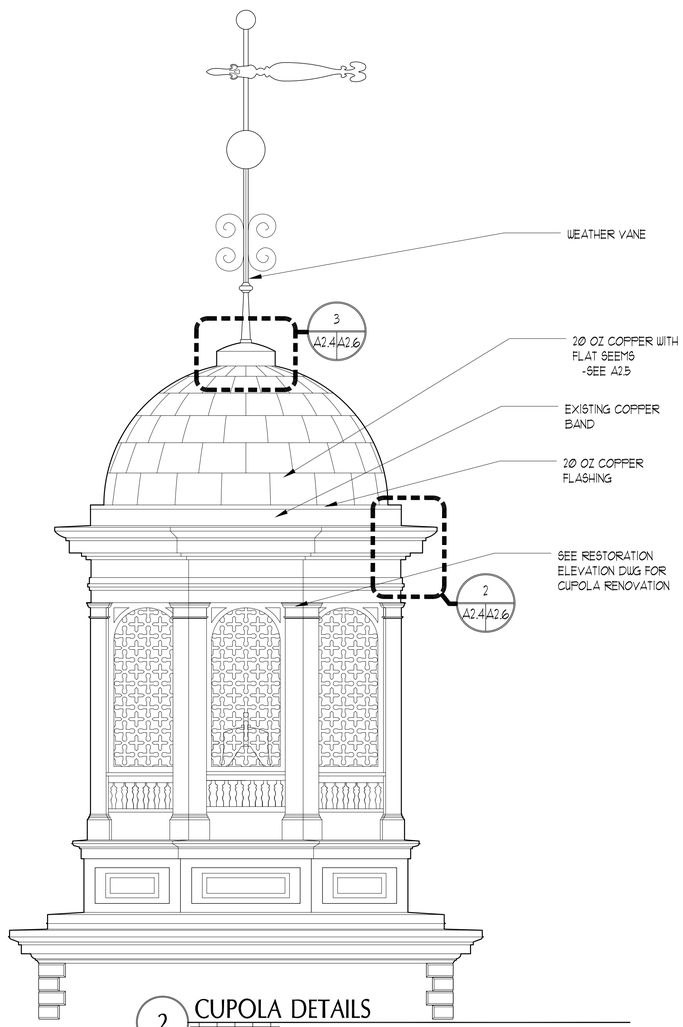

2 CUPOLA DETAILS

0 2'8" SCALE: 3/8" = 1'-0"

EXTERIOR NOTES:

1. EXTERIOR OF ALUMNI TO BE REPAIRED & REPOINTED - SEE RESTORATION ELEVATIONS FOR ADDITIONAL INFORMATION
2. EXIST BRICK WD TRIM AND FLUSH BD ON ALUMNI PROPER TO BE PTD - GRANITE BASE NOT TO BE PTD
3. ADD ALTERNATE #1: PROVIDE SHUTTERS
4. ADD ALTERNATE #2: PROVIDE SLATE ROOF W/ COPPER FLASHING
5. ADD ALTERNATE #3: PROVIDE CEMENTIOUS CLAPBD CLADDING ON THE CHAPEL, THE CONNECTORS & ABPLANALP
6. ADD ALTERNATE #4 RESTORE WEATHER VANE INCLUDING REGUILDING
7. ADD ALTERNATE #5: REMOVE X ARCH
8. ENTIRE CUPOLA TO BE PTD EXCEPT FOR COPPER & BELL

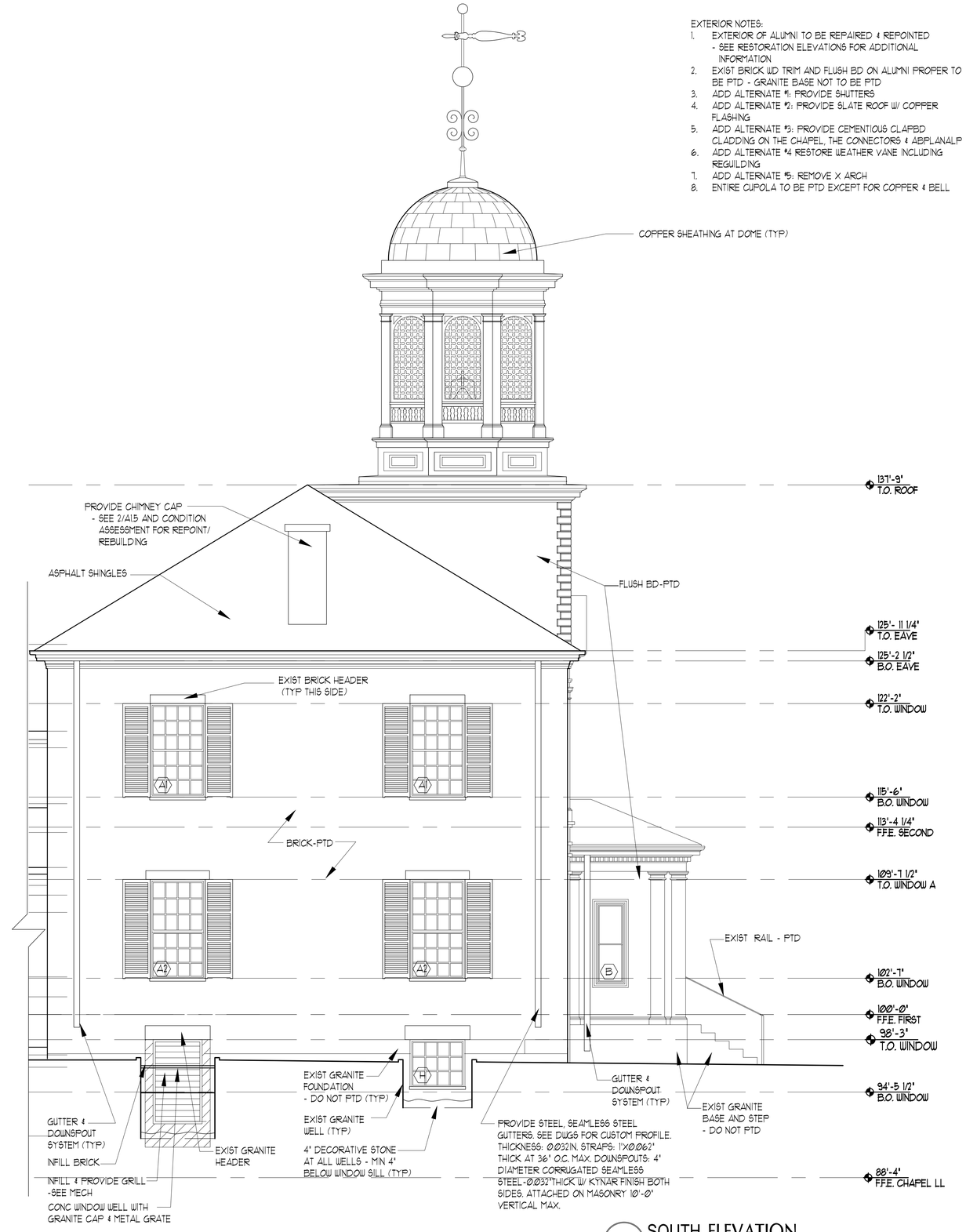

1 SOUTH ELEVATION

0 4'-0" SCALE: 1/4" = 1'-0"

65 NEWBURY STREET
PORTLAND, ME 04101
207.761.9000
info@portcityarch.com
WWW.PORTCITYARCH.COM

UNE
UNIVERSITY OF NEW ENGLAND

Allied Engineering
Structural Mechanical Electrical Commissioning

CONSIGLI
Est. 1905

BECKER
STRUCTURAL ENGINEERS

PERMIT SET

REVISIONS

No.	Description	Date
-	-	-

UNIVERSITY OF NEW ENGLAND
PORTLAND, MAINE

ALUMNI HALL RENOVATION

Project Number	14525
Date	May 01, 2015
Drawn by	JP TS SM AR
Checked by	LAS

A2.4

Scale AS NOTED