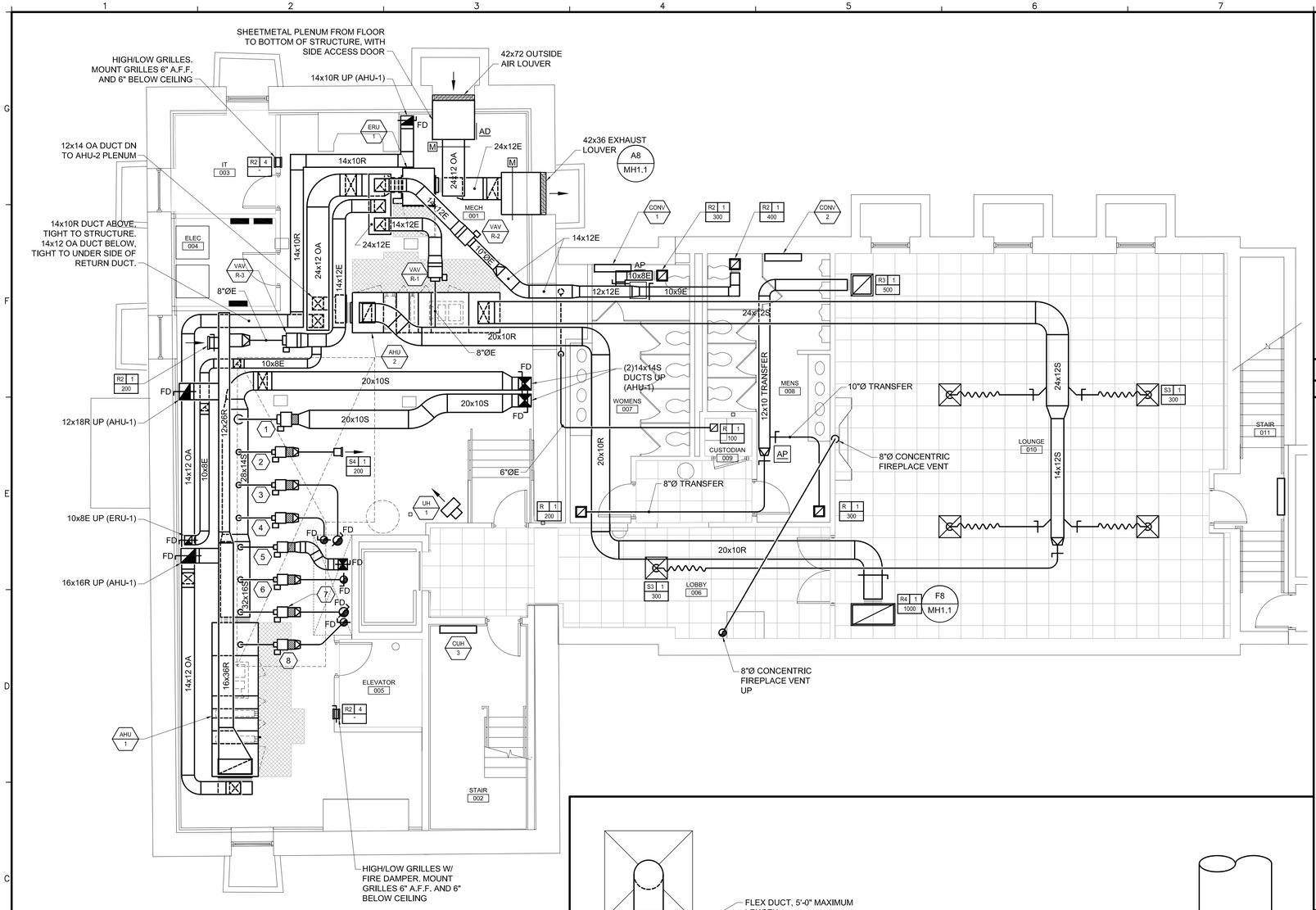

KEYED NOTES

1. VAV 1-2: SERVES CONFERENCE 108 - 10" INLET DUCT
2. VAV 1-1: SERVES MECH 001 - 5" INLET DUCT, 8"Ø OUTLET DUCT UP
3. VAV 1-5: SERVES LOUNGE 201 - 5" INLET DUCT, 10"Ø OUTLET DUCT UP
4. VAV 1-3: SERVES LOBBY 101 - 5" INLET DUCT, 8"Ø OUTLET DUCT UP
5. VAV 1-4: SERVES LOBBY 104/CONFERENCE 105 - 8" INLET DUCT, 10x12 OUTLET DUCT UP
6. VAV 1-9: SERVES ADMIN 207 - 4" INLET DUCT, 8"Ø OUTLET DUCT UP
7. VAV 1-10: SERVES PROVOST 209 - 5" INLET DUCT, 10"Ø OUTLET DUCT UP
8. VAV 1-11: SERVES OFFICE 206/LOBBY 204 - 5" INLET DUCT, 8"Ø OUTLET DUCT UP

A1 | MECHANICAL PLAN ~ LOWER LEVEL

3/16" = 1'-0"

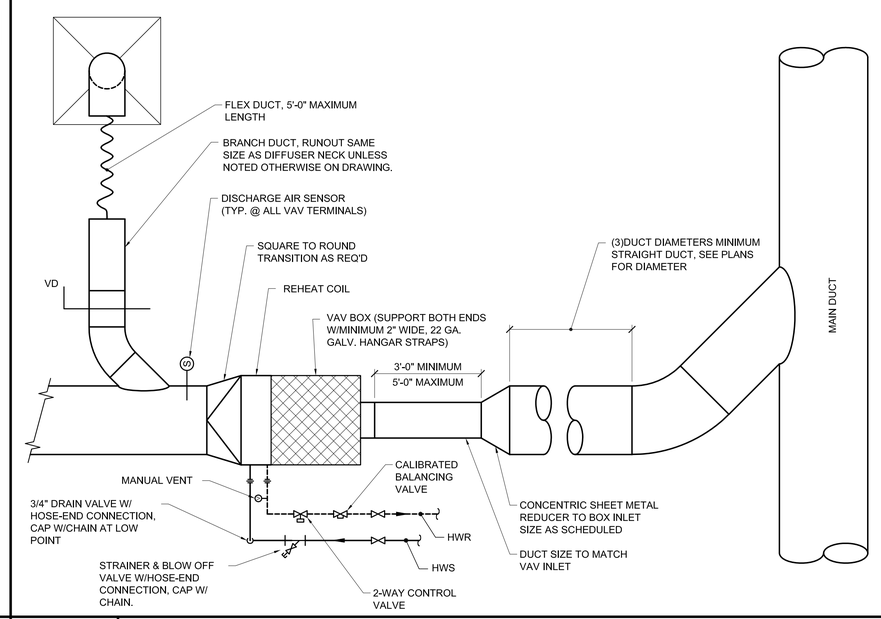

A4 | DETAIL ~ VAV BOX SCHEMATIC

NOT TO SCALE

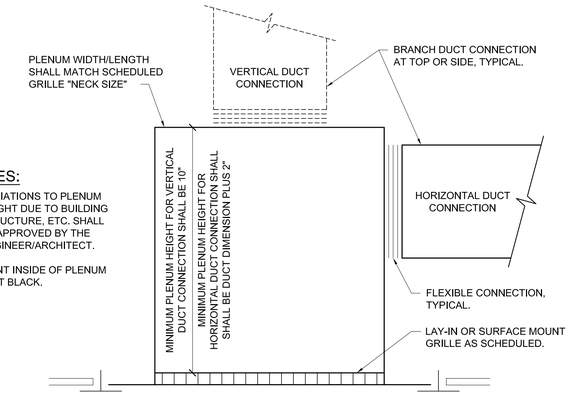

NOTES:

1. VARIATIONS TO PLENUM HEIGHT DUE TO BUILDING STRUCTURE, ETC. SHALL BE APPROVED BY THE ENGINEER/ARCHITECT.
2. PAINT INSIDE OF PLENUM FLAT BLACK.

F8 | DETAIL ~ RETURN AIR REGISTER BOOT

NOT TO SCALE

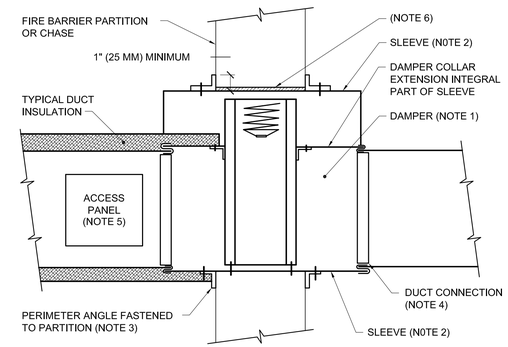

NOTES:

1. A VERTICAL DAMPER IS SHOWN. HORIZONTAL DAMPER INSTALLATION IS SIMILAR, FOLLOW MANUFATURER'S INSTRUCTIONS, INCLUDING FASTENER OPTIONS AND GAGES FOR SLEEVE AND PERIMETER ANGLES. FIRE DAMPERS MUST BE INSTALLED IN THE PARTITION OR FLOOR AND NOT OUTSIDE THE PENETRATION.

2. GALVANIZED SLEEVE: GAGE NOT LESS THAN CONNECTING DUCT. FASTEN SLEEVE TO DAMPER FRAME AND TO PERIMETER ANGLES.

3. PERIMETER ANGLES: GALVANIZED STEEL, NOT LESS THAN 1-1/2" x 1-1/2" (40x40mm), 14 GAGE, TO PROVIDE 1" (25mm) MINIMUM OVERLAP OF OPENING ON ALL 4 SIDES.

4. BREAKAWAY DUCT CONNECTION: CONTRACTOR'S OPTION OF TYPES SHOWN IN SMACNA LPDS, FIG. 2-13, SEAL JOINTS.

5. ACCESS PANELS: SIZE AND LOCATION TO PERMIT SERVICING THE FUSIBLE LINK OR LINKS.

C8 | DETAIL ~ TYPICAL FIRE DAMPER INSTALLATION

NOT TO SCALE

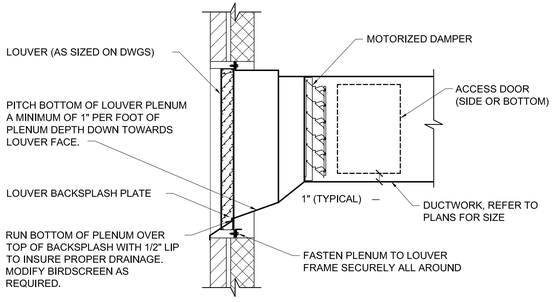

NOTES:

1. DETAIL IS BASED UPON RUSKIN MODEL No. ELF375D. FOR ALTERNATE MANUFACTURERS, COORDINATE AS REQUIRED FOR WEATHERTIGHT INSTALLATION PER MANUFACTURER'S RECOMMENDATIONS.

2. COORDINATE LOUVER FRAME CONSTRUCTION WITH SIDING MANUFACTURER TO INSURE PROPER FLASHING CAPABILITIES FOR A WEATHERTIGHT INSTALLATION.

3. SEAL BOTTOM OF PLENUM WATER TIGHT.

A8 | DETAIL ~ EXTERIOR EXHAUST LOUVER

NOT TO SCALE

65 NEWBURY STREET
PORTLAND, ME 04101
207.761.9000
info@portcityarch.com
WWW.PORTCITYARCH.COM

Allied Engineering
Structural Mechanical Electrical Commissioning
160 Veranda Street
Portland, Maine 04103
T: 207.221.2260
F: 207.221.2266
Web: www.allied-eng.com

ALLIED PROJECT No: 14088

Graphic Scale: 1" 1/2" 0 1"

STATE OF MAINE — IAN A. MACDONALD No. 6990 — LICENSED PROFESSIONAL ENGINEER

REVISIONS

No.	Description	Date

PERMIT SET

UNIVERSITY OF NEW ENGLAND
PORTLAND, MAINE

ALUMNI HALL RENOVATION

MECHANICAL PLAN ~ LOWER LEVEL

Project Number	14525
Date	May 1, 2015
Drawn by	REW
Checked by	HAG

M1

Scale AS NOTED

N:\Projects\2014\14088 ~ UNE - Alumni Hall\00 Drawing Files\14088M.dwg Apr 30, 2015 - 3:41pm