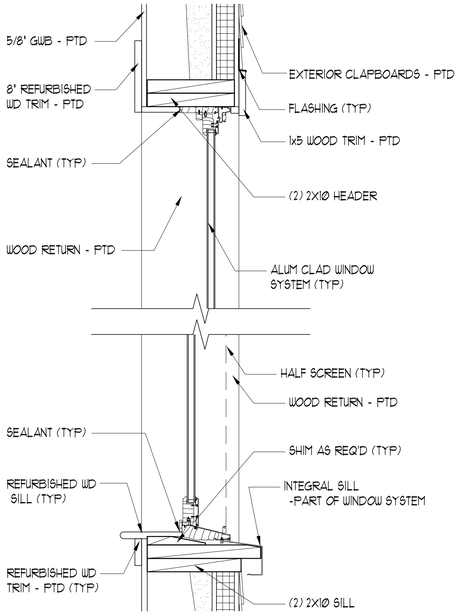

2 CHAPEL WINDOW DETAIL

0 1'-0" SCALE: 1" = 1'-0"

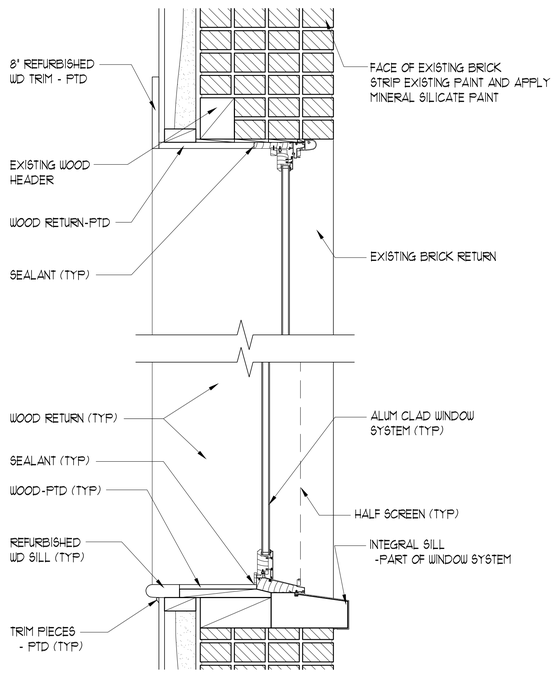

1 ALUMNI WINDOW DETAIL

0 1'-0" SCALE: 1" = 1'-0"

NOTES:

1. REFINISH X WINDOWS
2. X WINDOW TO REMAIN

	WINDOW			DETAILS		NOTES
TYPE	SIZE (WXH)	MATERIAL	OPERATION	HEAD	SILL	
A1	3'-8" X 6'-5"	ALUM	DOUBLE	1/A5.3	1/A5.3	
A2	3'-8" X 6'-10"	ALUM	DOUBLE	1/A5.3	1/A5.3	
B	2'-5/8" X 5' 7-9/16"	X	FIX	N/A	N/A	1
C	3'-4" X 1'-2-1/2"	X	FIX	N/A	N/A	2
D	2' 11-7/8" X 1' 2-1/2"	WD	FIX	2/A5.3	2/A5.3	
E	3'-4-1/2" X 5'-10"	ALUM	DOUBLE	2/A5.3	2/A5.3	
F1	3'-2" X 3'-11 3/4"	ALUM	DOUBLE	2/A5.3	2/A5.3	
F2	3'-2" X 5'-10"	ALUM	DOUBLE	2/A5.3	2/A5.3	
G	3'-4-1/2" X3'-6"	ALUM	FIX	2/A5.3	2/A5.3	
H	3'-11" X 3'-6-5/8"	ALUM	DOUBLE	2/A5.3	2/A5.3	
I	3'-4" X 1'-2-1/8"	WD	FIX	2/A5.3	2/A5.3	
J	3'-4-7/8" X 1'-6"	WD	FIX	2/A5.3	2/A5.3	
K	3'-4"	WD	FIX	N/A	N/A	

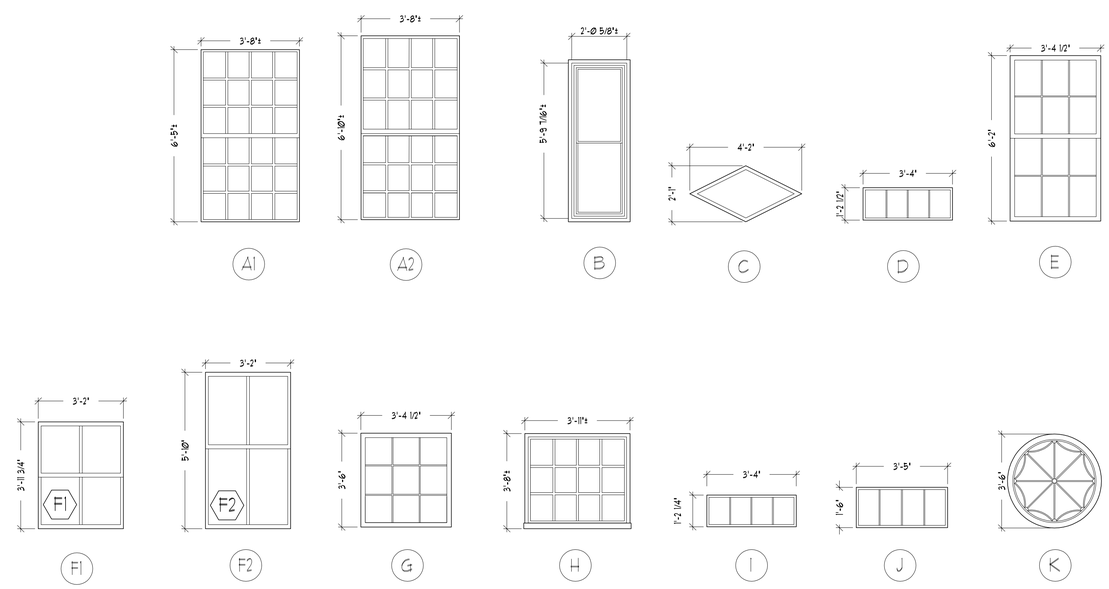

65 NEWBURY STREET
PORTLAND, ME 04101
207.761.9000
info@portcityarch.com
WWW.PORTCITYARCH.COM

UNE
UNIVERSITY OF NEW ENGLAND

Allied Engineering
Structural Mechanical Electrical Commissioning

CONSIGLI
Est. 1905

BECKER
STRUCTURAL ENGINEERS

PERMIT SET

REVISIONS

No.	Description	Date
-	-	-

UNIVERSITY OF NEW ENGLAND
PORTLAND, MAINE

ALUMNI HALL RENOVATION

WINDOW SCHEDULE

Project Number	14525
Date	May 01, 2015
Drawn by	JP TS SM AR
Checked by	LAS

I6

Scale AS NOTED