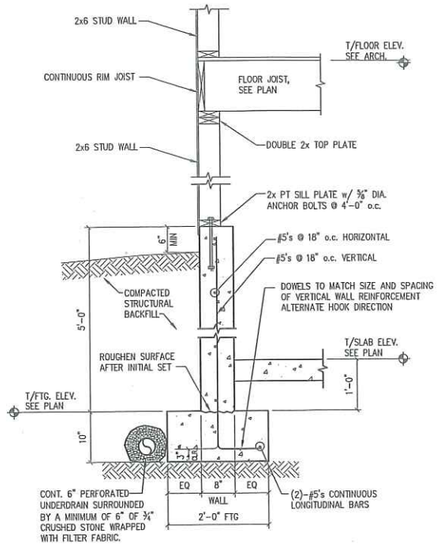

SHEET TITLE: PLYMOUTH HOLDINGS
116 WALTON STREET PORTLAND, ME

SHEET TITLE: FOUNDATION SECTION

CASCO BAY ENGINEERING
436 Fore Street, Portland, ME 04101
Tel 207.842.2800 Fax 207.842.2808
www.cascobayengineering.com

SCALE:	3/4"=1'-0"
DESIGNED:	TD
DRAWN:	TD
DATE:	10-2-13
PROJECT NUMBER:	13-070

SK1

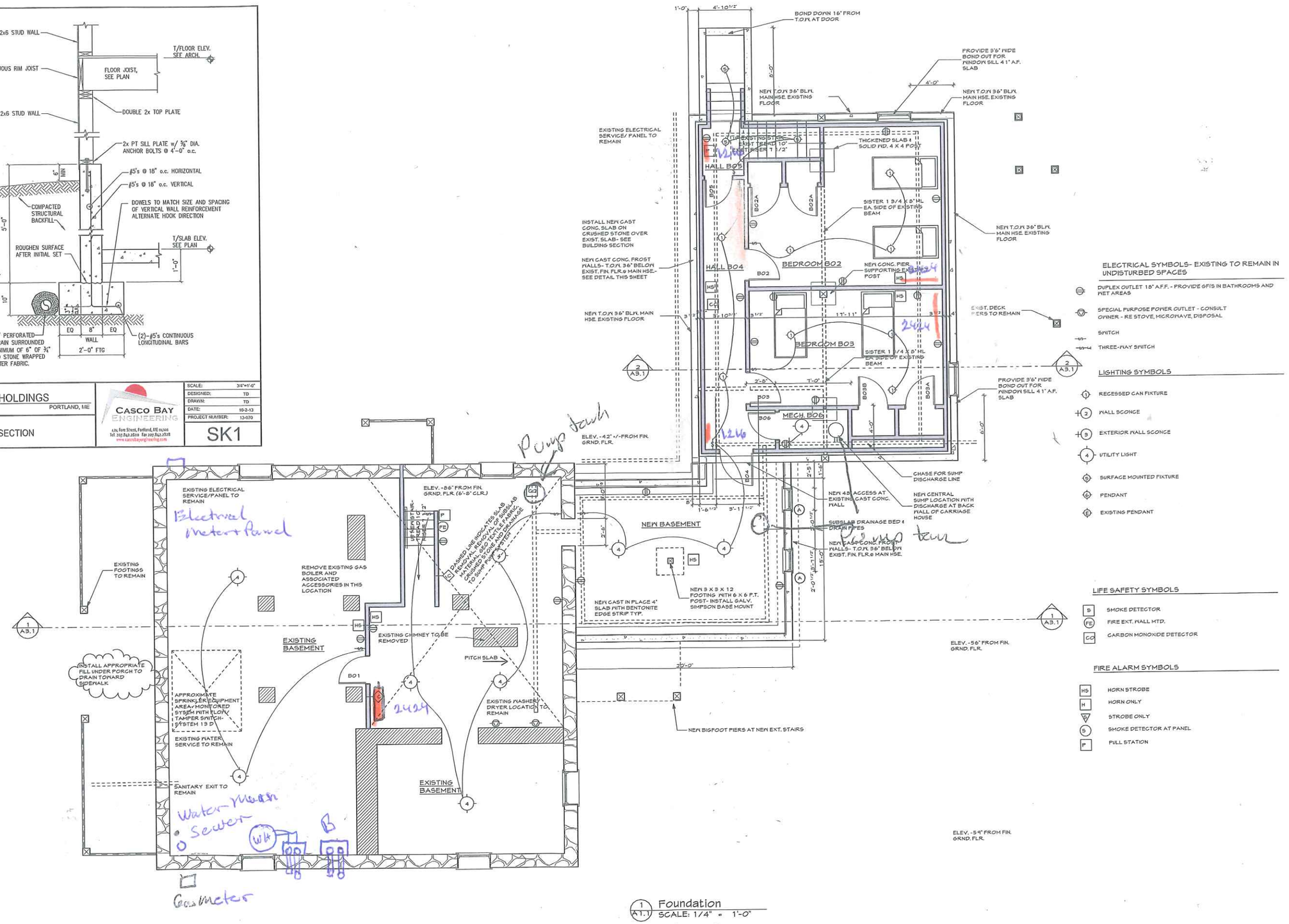

1 A1.1 Foundation
SCALE: 1/4" = 1'-0"

ELECTRICAL SYMBOLS- EXISTING TO REMAIN IN UNDISTURBED SPACES

- DUPLEX OUTLET 18" A.F.F. - PROVIDE GFIS IN BATHROOMS AND WET AREAS
- SPECIAL PURPOSE POWER OUTLET - CONSULT OWNER - RE STOVE, MICROWAVE, DISPOSAL
- SWITCH
- THREE-WAY SWITCH

LIGHTING SYMBOLS

- RECESSED CAN FIXTURE
- WALL SCONCE
- EXTERIOR WALL SCONCE
- UTILITY LIGHT
- SURFACE MOUNTED FIXTURE
- PENDANT
- EXISTING PENDANT

LIFE SAFETY SYMBOLS

- SD SMOKE DETECTOR
- FE FIRE EXT. WALL MTD.
- CO CARBON MONOXIDE DETECTOR

FIRE ALARM SYMBOLS

- HS HORN STROBE
- H HORN ONLY
- STROBE ONLY
- S SMOKE DETECTOR AT PANEL
- F PULL STATION

PLYMOUTH HOLDINGS- SSB HOLDINGS
116 WALTON ST. PORTLAND, MAINE

LICENSED ARCHITECT JOSEPH A. DELANEY 21722 STATE OF MAINE

WHIPPLE — CALLENDER ARCHITECTS
136 PLEASANT AVE.
PORTLAND, ME 04103
P 207.775.2646
F 207.775.3631
www.whipplecallender.com

MARK	DATE	DESCRIPTION
	7.10.13	misc. revisions

DATE: CONSTRUCTION 11.8.13
CHECKED BY: JAD
DRAWN BY: JAD
JOB: 10-2013
SHEET TITLE: BASEMENT PLAN

A1.1

THIS DRAWING IS AN INSTRUMENT OF SERVICE AND SHALL REMAIN THE PROPERTY OF WHIPPLE CALLENDER ARCHITECTS. IT SHALL NOT BE USED FOR ANY OTHER PURPOSE THAT FOR WHICH IT IS SPECIFICALLY FURNISHED

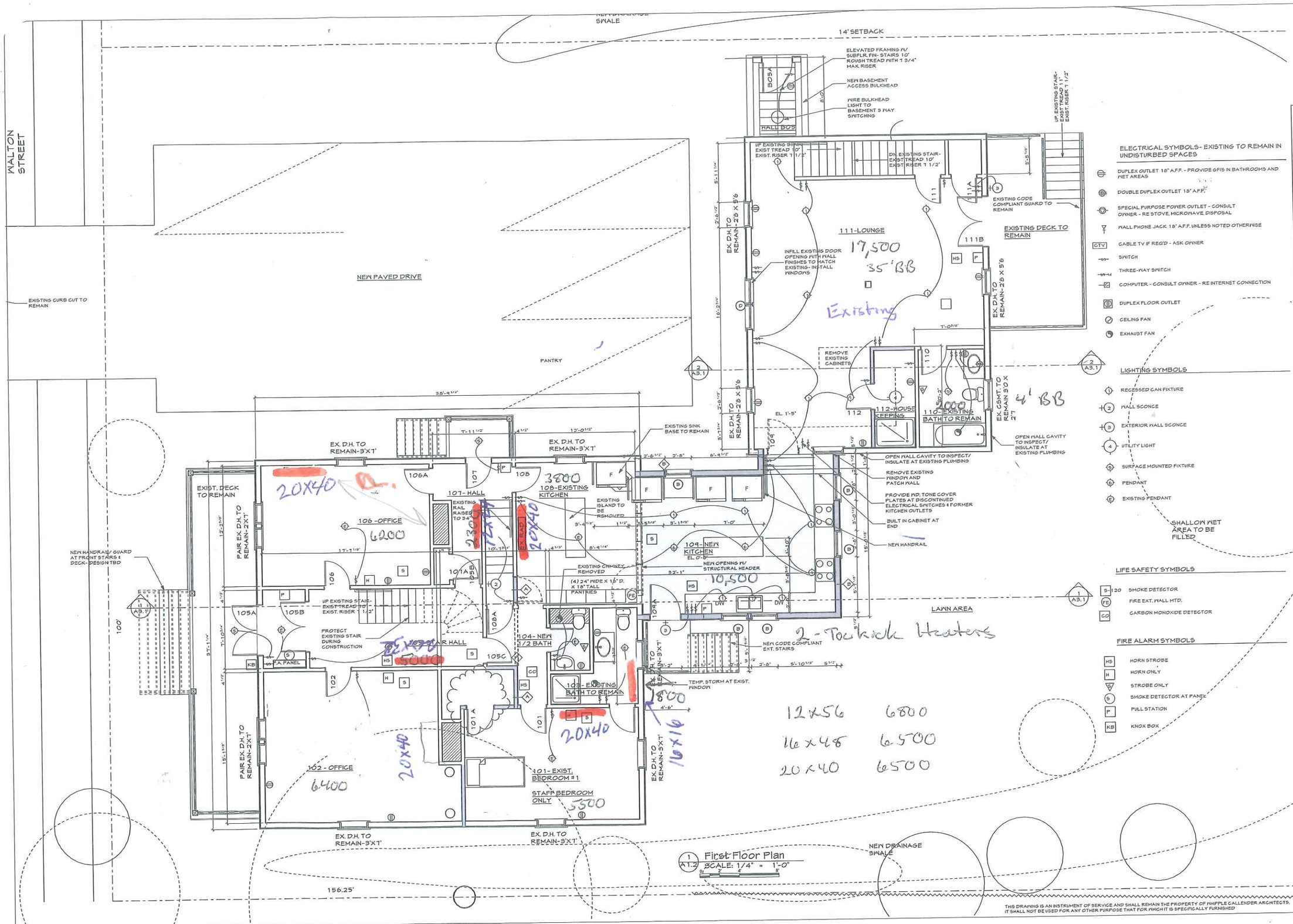

ELECTRICAL SYMBOLS- EXISTING TO REMAIN IN UNDISTURBED SPACES

- DUPLEX OUTLET 18" A.F.F. - PROVIDE GFIS IN BATHROOMS AND WET AREAS
- DOUBLE DUPLEX OUTLET 18" A.F.F.
- SPECIAL PURPOSE POWER OUTLET - CONSULT OWNER - RE STOVE, MICROWAVE, DISPOSAL
- WALL PHONE JACK 18" A.F.F. UNLESS NOTED OTHERWISE
- CTV CABLE TV IF REQ'D - ASK OWNER
- SWITCH
- THREE-WAY SWITCH
- COMPUTER - CONSULT OWNER - RE INTERNET CONNECTION
- DUPLEX FLOOR OUTLET
- CEILING FAN
- EXHAUST FAN

LIGHTING SYMBOLS

- 1 RECESSED CAN FIXTURE
- 2 WALL SCONCE
- 3 EXTERIOR WALL SCONCE
- 4 UTILITY LIGHT
- SURFACE MOUNTED FIXTURE
- PENDANT
- E EXISTING PENDANT

SHALL ON WET AREA TO BE FILLED

LIFE SAFETY SYMBOLS

- S-120 SMOKE DETECTOR
- FE FIRE EXT. WALL MTD.
- CO CARBON MONOXIDE DETECTOR

FIRE ALARM SYMBOLS

- HS HORN STROBE
- H HORN ONLY
- STROBE ONLY
- S SMOKE DETECTOR AT PANEL
- P PULL STATION
- KB KNOX BOX

PLYMOUTH HOLDINGS- SSB HOLDINGS

116 WALTON ST. PORTLAND, MAINE

LICENSED ARCHITECT JOSEPH A. DELANEY #1722 STATE OF MAINE

WHIPPLE — CALLENDER ARCHITECTS

196 PLEASANT AVE.
PORTLAND, ME 04103
P 207.775.2696
F 207.775.9631
www.whipplecallender.com

MARK	DATE	DESCRIPTION

DATE: CONSTRUCTION 11.8.13
CHECKED BY: JAD
DRAWN BY: JAD
JOB: 10-2013
SHEET TITLE: FIRST FLOOR PLAN 1/4" = 1'-0"

A1.2

THIS DRAWING IS AN INSTRUMENT OF SERVICE AND SHALL REMAIN THE PROPERTY OF WHIPPLE CALLENDER ARCHITECTS. IT SHALL NOT BE USED FOR ANY OTHER PURPOSE THAT FOR WHICH IT IS SPECIFICALLY FURNISHED

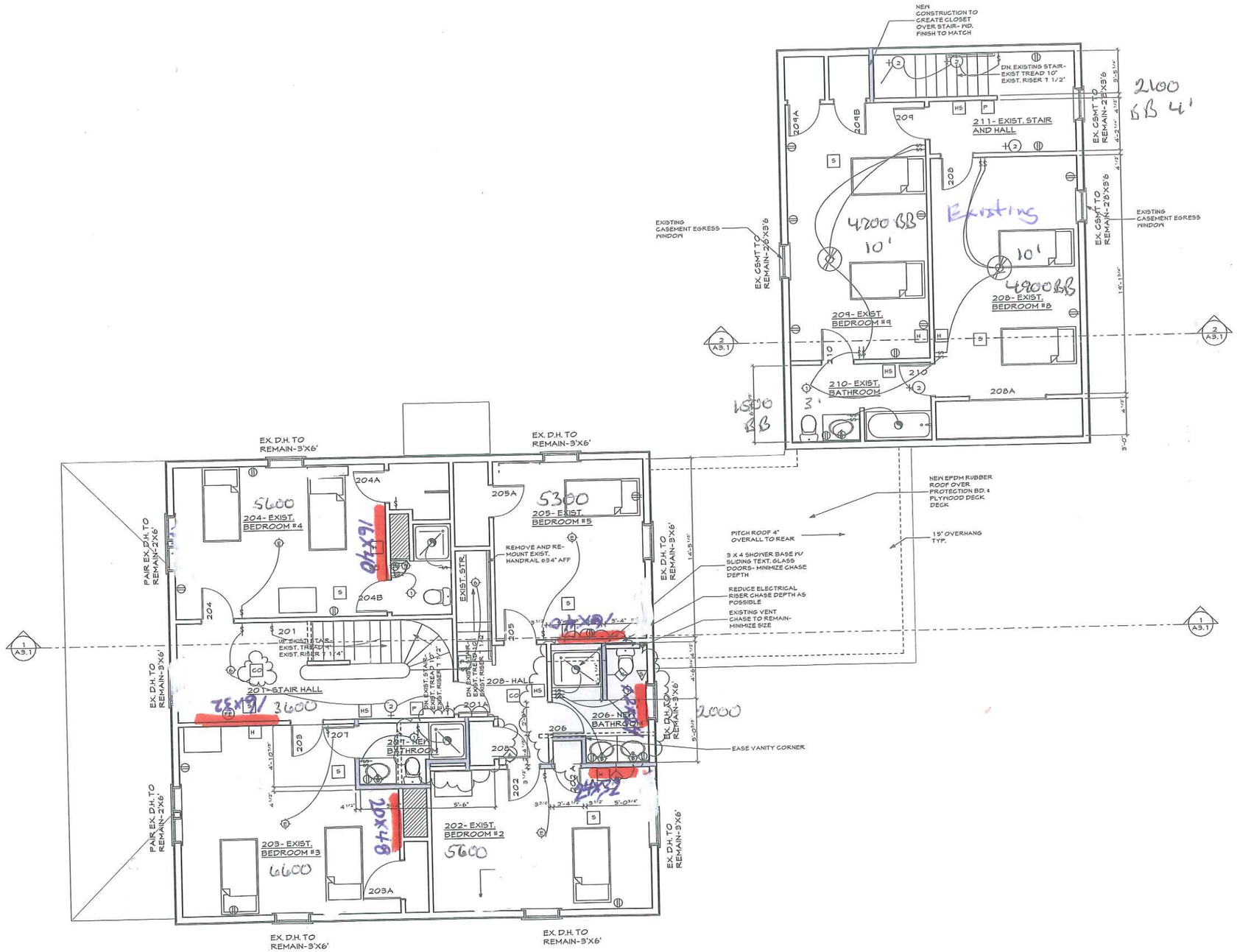

1 A1.3 Second Floor Plan
SCALE: 1/4" = 1'-0"

ELECTRICAL SYMBOLS- EXISTING TO REMAIN IN UNDISTURBED SPACES

- DUPLEX OUTLET 18" A.F.F. - PROVIDE GFIS IN BATHROOMS AND WET AREAS
- DOUBLE DUPLEX OUTLET 18"
- SPECIAL PURPOSE POWER OUTLET - CONSULT OWNER - RE STOVE, MICROWAVE, DISPOSAL
- WALL PHONE JACK 18" A.F.F. UNLESS NOTED OTHERWISE
- CTV — CABLE TV IF REQ'D - ASK OWNER
- SWITCH
- THREE-WAY SWITCH
- COMPUTER - CONSULT OWNER - RE INTERNET CONNECTION
- DUPLEX FLOOR OUTLET
- CEILING FAN
- EXHAUST FAN

LIGHTING SYMBOLS

- 1 — RECESSED CAN FIXTURE
- 2 — WALL SCONCE
- 3 — EXTERIOR WALL SCONCE
- 4 — UTILITY LIGHT
- 5 — SURFACE MOUNTED FIXTURE
- 6 — PENDANT
- 6 — EXISTING PENDANT
- CEILING FAN/ LIGHT

LIFE SAFETY SYMBOLS

- S — SMOKE DETECTOR
- FE — FIRE EXT. WALL MTD.
- CO — CARBON MONOXIDE DETECTOR

FIRE ALARM SYMBOLS

- HS — HORN STROBE
- H — HORN ONLY
- S — STROBE ONLY
- S — SMOKE DETECTOR AT PANEL
- P — PULL STATION

PLYMOUTH HOLDINGS- SSB HOLDINGS

116 WALTON ST.
PORTLAND, MAINE

LICENSED ARCHITECT JOSEPH A. DELANEY #1722 STATE OF MAINE

WHIPPLE — CALLENDER ARCHITECTS
136 PLEASANT AVE.
PORTLAND, ME 04103
P 207.775.2696
F 207.775.9631
www.whipplecallender.com

MARK	DATE	DESCRIPTION

DATE: CONSTRUCTION
11.8.13
CHECKED BY: JAD
DRAWN BY: JAD
JOB: 10-2013
SHEET TITLE: SECOND FLOOR PLAN

A1.3

THIS DRAWING IS AN INSTRUMENT OF SERVICE AND SHALL REMAIN THE PROPERTY OF WHIPPLE CALLENDER ARCHITECTS. IT SHALL NOT BE USED FOR ANY OTHER PURPOSE THAT FOR WHICH IT IS SPECIFICALLY FURNISHED

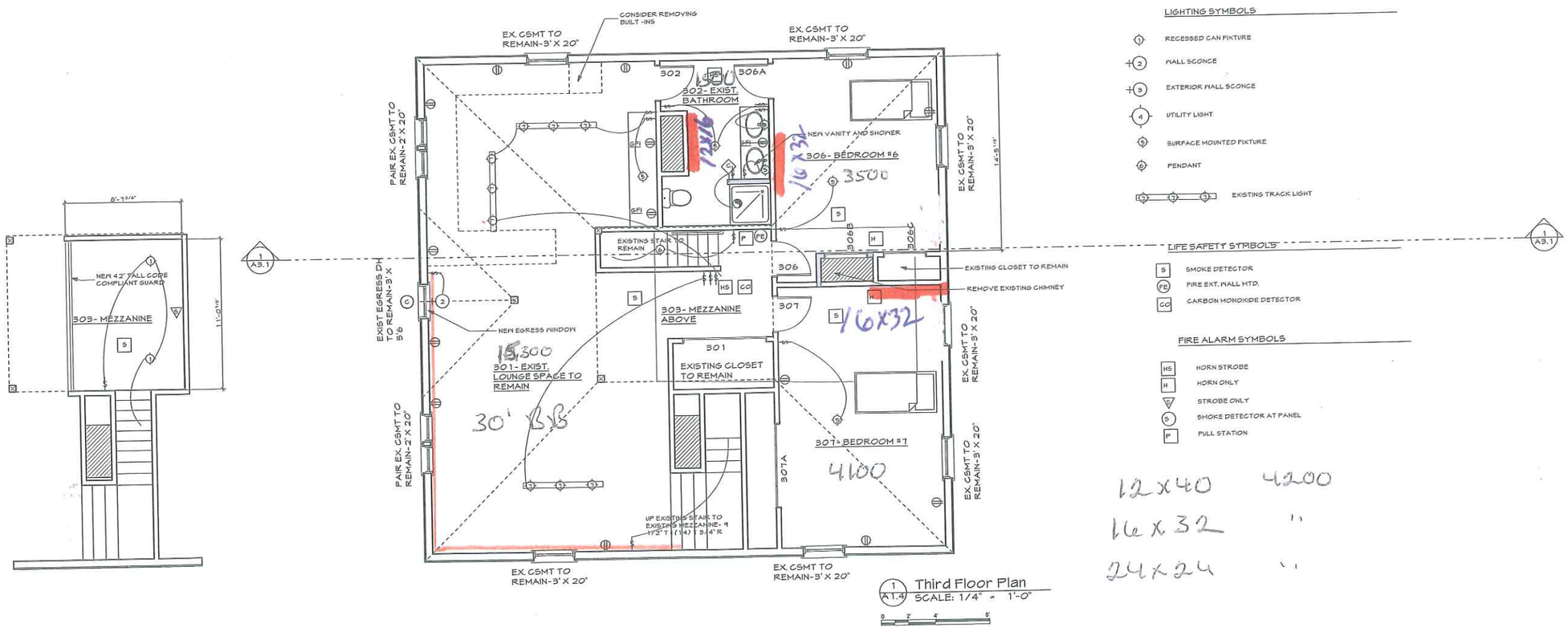

1 A1.4 Third Floor Plan
SCALE: 1/4" = 1'-0"

0 2' 4' 8'

ELECTRICAL SYMBOLS- EXISTING TO REMAIN IN UNDISTURBED SPACES

- DUPLEX OUTLET 18" A.F.F. - PROVIDE GFIS IN BATHROOMS AND WET AREAS
- DOUBLE DUPLEX OUTLET 18" A.F.F.
- SPECIAL PURPOSE POWER OUTLET - CONSULT OWNER - RE STOVE, MICROWAVE, DISPOSAL
- WALL PHONE JACK 18" A.F.F. UNLESS NOTED OTHERWISE
- CTV — CABLE TV IF REQ'D - ASK OWNER
- SWITCH
- THREE-WAY SWITCH
- COMPUTER - CONSULT OWNER - RE INTERNET CONNECTION
- DUPLEX FLOOR OUTLET
- CEILING FAN
- EXHAUST FAN

LIGHTING SYMBOLS

- 1 — RECESSED CAN FIXTURE
- 2 — WALL SCONCE
- 3 — EXTERIOR WALL SCONCE
- 4 — UTILITY LIGHT
- 5 — SURFACE MOUNTED FIXTURE
- 6 — PENDANT
- EXISTING TRACK LIGHT

LIFE SAFETY SYMBOLS

- S — SMOKE DETECTOR
- FD — FIRE EXT. WALL MTD.
- CC — CARBON MONOXIDE DETECTOR

FIRE ALARM SYMBOLS

- HS — HORN STROBE
- H — HORN ONLY
- STROBE ONLY
- SMOKE DETECTOR AT PANEL
- P — PULL STATION

12 x 40 4200
16 x 32 "
24 x 24 "

PLYMOUTH HOLDINGS- SSB HOLDINGS

PORTLAND, MAINE

116 WALTON ST.

LICENSED ARCHITECT JOSEPH A. DELANEY #1722 STATE OF MAINE

WHIPPLE — CALLENDER ARCHITECTS

136 PLEASANT AVE.
PORTLAND, ME 04103
P 207.775.2646
F 207.775.3631
www.whipplecallender.com

MARK	DATE	DESCRIPTION

DATE: CONSTRUCTION
11.8.13
CHECKED BY: JAD
DRAWN BY: JAD
JOB: 10-2013
SHEET TITLE: THIRD FLOOR PLAN

A1.4

THIS DRAWING IS AN INSTRUMENT OF SERVICE AND SHALL REMAIN THE PROPERTY OF WHIPPLE CALLENDER ARCHITECTS. IT SHALL NOT BE USED FOR ANY OTHER PURPOSE THAT FOR WHICH IT IS SPECIFICALLY FURNISHED