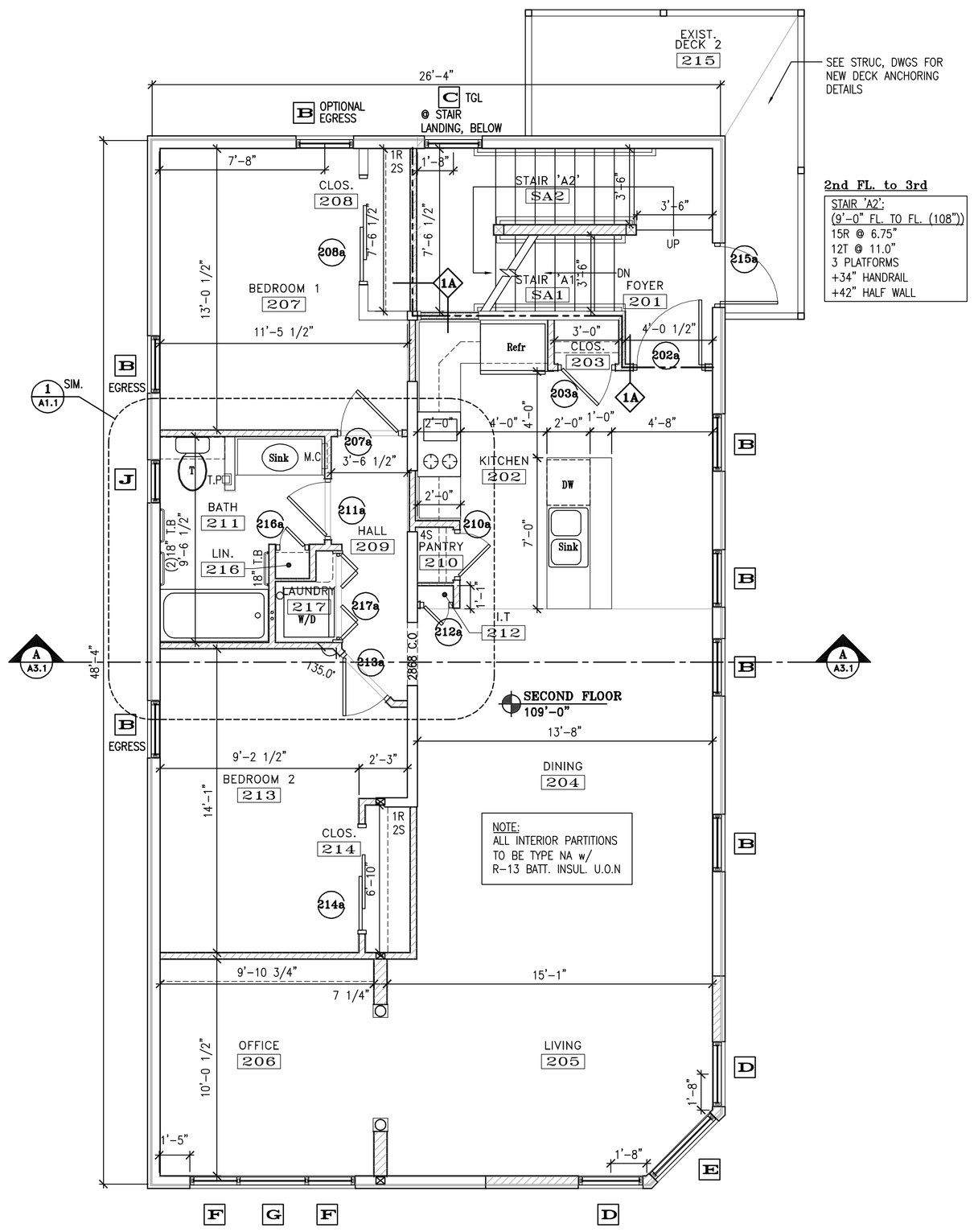

2nd FL. to 3rd

STAIR 'A2':
(9'-0" FL. TO FL. (108"))
15R @ 6.75"
12T @ 11.0"
3 PLATFORMS
+34" HANDRAIL
+42" HALF WALL

SECOND FLOOR PLAN
SCALE: 1/4" = 1'-0"

CASING DETAILS:

NOTE: ALL FOR PAINT FINISH

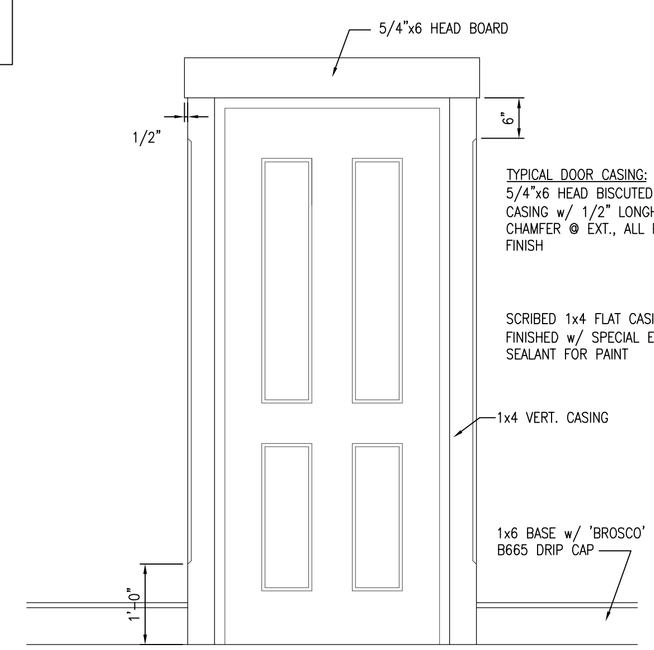

TYPICAL DOOR CASING:
5/4"x6 HEAD BISCUTED TO 1x4 VERT. CASING w/ 1/2" LONGHORN & 1/2" CHAMFER @ EXT., ALL FOR PAINT FINISH

SCRIBED 1x4 FLAT CASING @ STONE, FINISHED w/ SPECIAL ELASTOMERIC SEALANT FOR PAINT

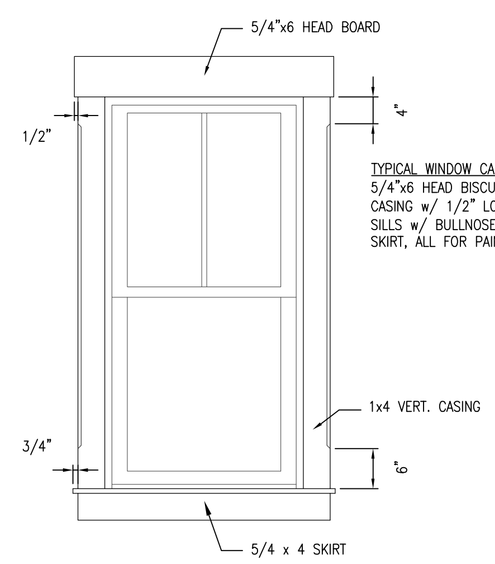

TYPICAL WINDOW CASING:
5/4"x6 HEAD BISCUTED TO 1x4 VERT. CASING w/ 1/2" LONGHORN 5/4" SILLS w/ BULLNOSE FINISH & 1x3 SKIRT, ALL FOR PAINT FINISH

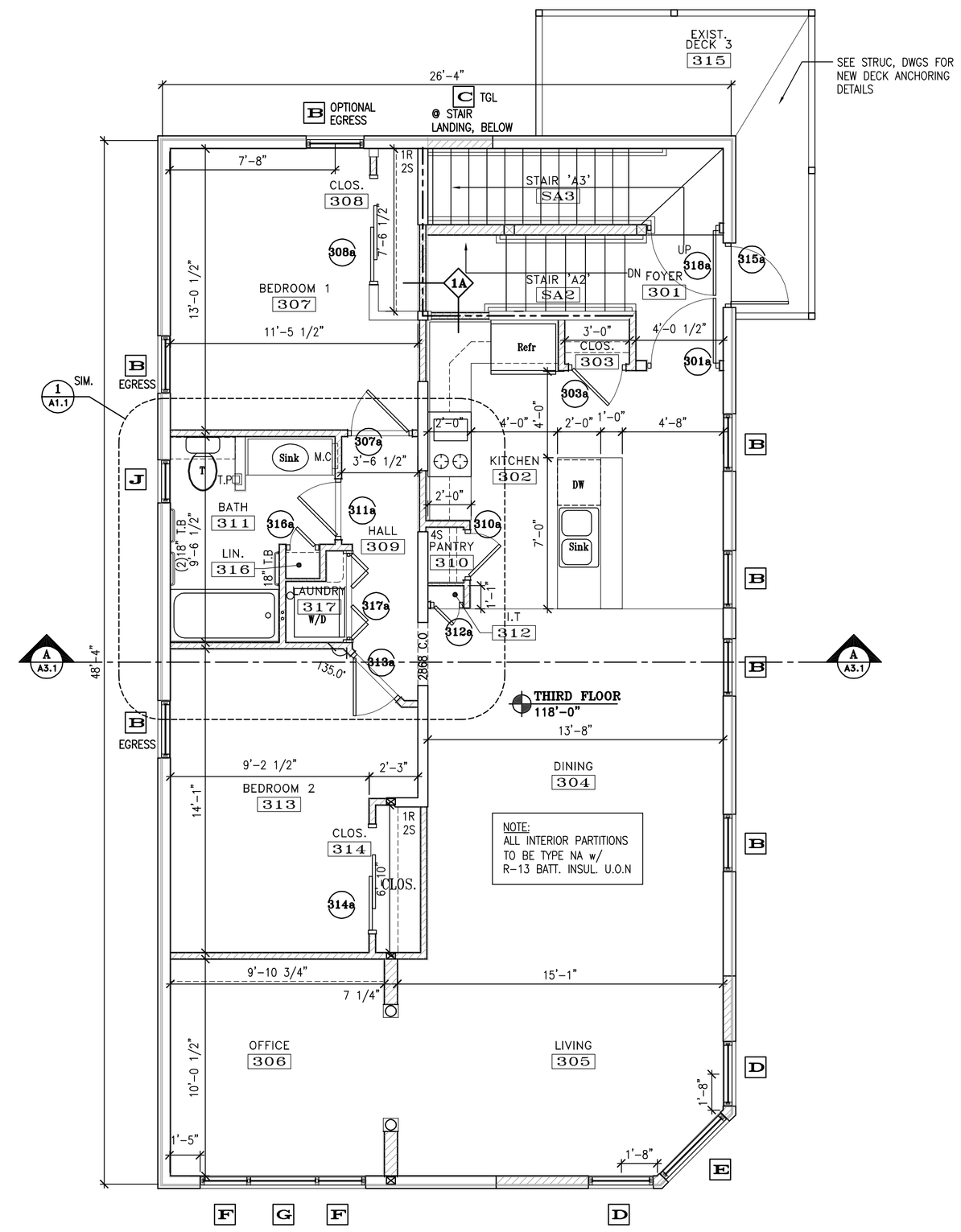

THIRD FLOOR PLAN
SCALE: 1/4" = 1'-0"

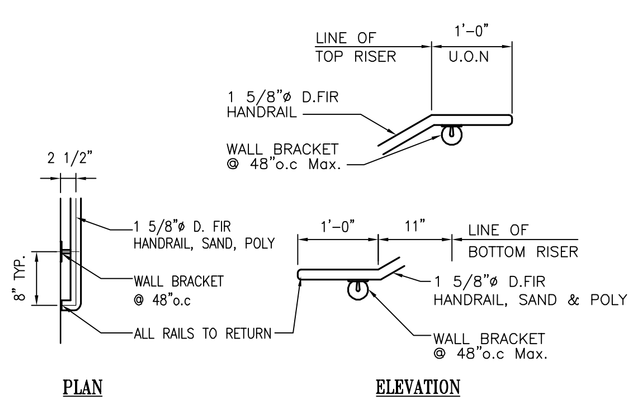

WALL MOUNTED RAILING DETAIL
SCALE: 3/4" = 1'-0"

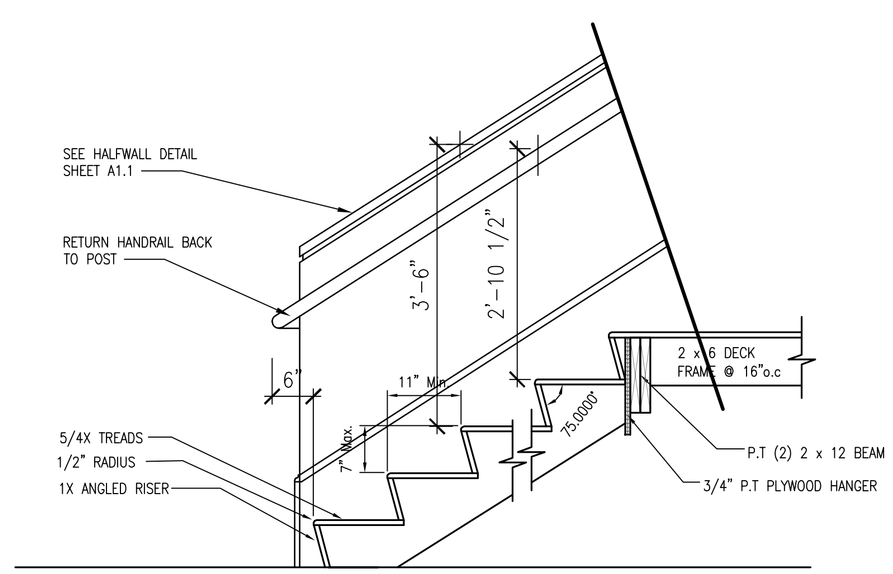

TYPICAL STAIR NOSING DETAIL
SCALE: 3/4" = 1'-0"

AMENDED PERMIT SET 11-04-11

ALPHA architects
17 CHESTNUT STREET
PORTLAND, ME 04101
PHONE: 207.761.9500
FAX: 207.761.9595
design@alphaarchitects.com

COPYRIGHT
Reuse or reproduction of the contents of this document is not permitted without written permission of ALPHA ARCHITECTS

Walton Street 3 Unit
15 Walton Street
Portland Maine 04103

JOB: 11024

ISSUE DATE	
PRELIM.	08-25-11
PBoard	Not Req'd
CD's	10-12-11
REV. 1	-
REV. 2	-
PRINT	11-04-11

SECOND & & THIRD FLOOR PLANS

A1.2