HINGE KIT DETAIL

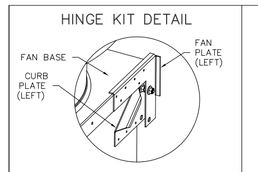

FAN IN CLOSED POSITION

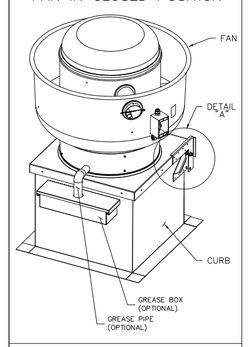

FAN IN OPEN POSITION

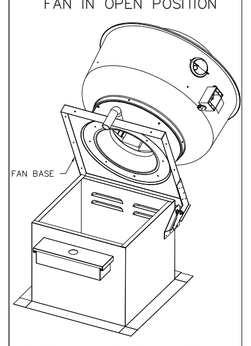

ATTENTION: INSTALLER SHOULD SUPPLY ENOUGH ELECTRICAL CORD TO LET FAN MAKE COMPLETE SWING.

GREASE BOX INSTALLATION

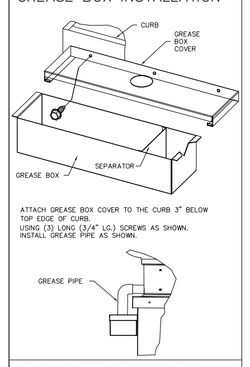

ATTACH GREASE BOX COVER TO THE CURB 3" BELOW TOP EDGE OF CURB.
USING (3) LONG (3/4" LG.) SCREWS AS SHOWN.
INSTALL GREASE PIPE AS SHOWN.

ELECTRICAL PACKAGE NOTES

1. A PRE-WIRED ELECTRICAL CONTROL PACKAGE SHALL BE PROVIDED TO OPERATE THE HOOD LIGHTS AND FANS.
2. PACKAGE SHALL CONSIST OF SWITCH PANEL WITH LIGHT/FAN SWITCHES, FIRE RELAY, FAN STARTERS, TERMINALS, SUPPLY/INTAKE ASSEMBLY FOR EACH FAN (OPTIONAL), NUMBERED WIRE TERMINALS FOR EASY FIELD CONNECTIONS, DOUBLE-DUAL FIRE SYSTEM MICROSWITCH CONNECTION.
3. ONE RELAY IS WIRED TO MICROSWITCH (IN FIRE SYSTEM) AND ENERGIZES WHEN SYSTEM ACTUATES. ONE CONTACT ADDITIONAL FIRE SYSTEM ACTUATED DRY CONTACT.
4. ELECTRICAL CONDUIT DROPS FROM THE PANELS SHALL BE CONNECTED TO THE NUMBERED TERMINAL STRIP. CONDUIT FROM FAN(S) TO THE NUMBERED TERMINAL STRIP(S) SHALL BE SUPPLIED BY THE ELECTRICAL CONTRACTOR.

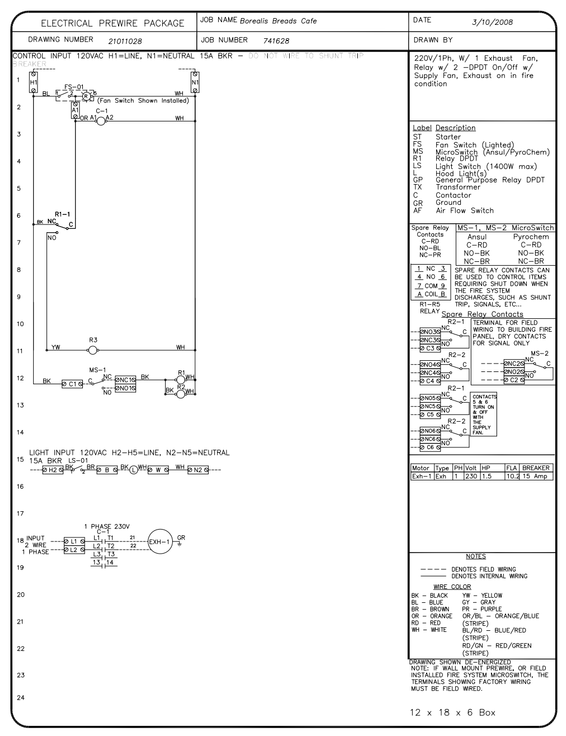

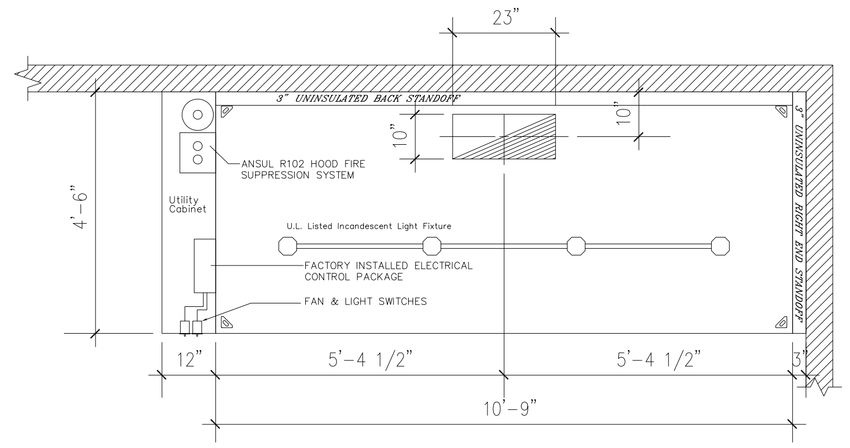

PLAN VIEW – Hood #1 – 10' 9.00" LONG 5424ND-2

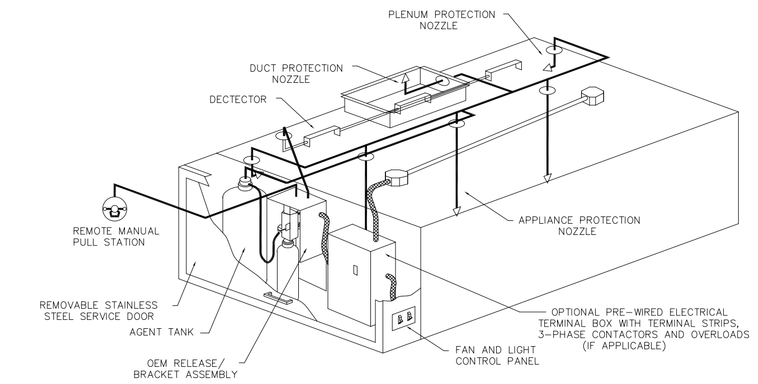

TYPICAL ANSUL R-102 SYSTEM LAYOUT

PLEASE NOTE: THE HOOD MAY BE INSTALLED WITH A 0 INCH CLEARANCE TO COMBUSTIBLE MATERIALS IF CONSTRUCTED IN ONE OF THE FOLLOWING METHODS:
1 INCH LAYER OF INSULATION (TYPE 475) OWENS CORNING, JOHNS MANVILLE, 3M FIRE WRAP
1 INCH INSULATED BACKSPLASH
3 INCH UN-INSULATED AIRSPACE
BACK-RETURN (BR) SUPPY PLENUM
THESE RATINGS APPLY TO TOP, ENDS, BACK AND FRONT OF THE EXHAUST HOOD
REPORT NUMBER: 3054804-001
INTERTEK TESTING SERVICES NA INC.
ISSUED 11/2004 TO CAPTIVE-AIRE SYSTEMS

GENERAL NOTES

1. ALL ELECTRICAL "FIELD" CONNECTIONS AND RELATED INTERCONNECTIONS BY ELECTRICAL CONTRACTORS.
2. ALL PLUMBING "FIELD" CONNECTIONS AND RELATED INTERCONNECTIONS BY PLUMBING CONTRACTORS.
3. ALL ASSOCIATED HANGER MATERIALS BY INSTALLING CONTRACTORS.
4. 8" LONG FACTORY LOCATED AND WELDED HANGER BRACKETS AS SHOWN ON PLANS.
5. ALL CONNECTIONS FROM CAPTIVE-AIRE DUCT PER THE PLANS BY MECHANICAL CONTRACTORS.
6. ALL LIGHTS SHOWN INSTALLED BY CAPTIVE-AIRE, WIRED TO JUNCTION BOXES, WITH ALL INTERCONNECTIONS BETWEEN HOODS AND TO SWITCHES BY ELECTRICAL CONTRACTOR.
7. LAMPS FOR LIGHT FIXTURES BY INSTALLING CONTRACTOR.
8. SEISMIC RESTRAINTS ARE RESPONSIBILITY OF INSTALLING CONTRACTOR.
9. INSTALLING CONTRACTORS ASSUME ALL RELATED REPONSIBILITY FOR VERIFICATION OF DIMENSIONAL DATA CONTAINED ON THESE DOCUMENTS FOR COMPLIANCE WITH EQUIPMENT DIMENSIONAL AND CODE REQUIREMENTS IN EFFECT PRIOR TO ANY RELEASE FOR PRODUCTION OF EQUIPMENT SHOWN.
10. SIGNED AND "APPROVED" COPIES OF THIS DOCUMENT MUST BE RECEIVED BY THE FACTORY PRIOR TO COMMENCEMENT OF FABRICATION.
11. NOMINAL HOOD DIMENSIONS AS SHOWN ON DRAWINGS.

PORT CITY ARCHITECTURE
65 NEWBURY STREET
PORTLAND, ME 04101
207.761.9000
fax: 207.761.2010
info@portcityarch.com

SPECIFICATIONS

THE RESTAURANT FIRE SUPPRESSION SYSTEM SHALL BE THE PRE-ENGINEERED TYPE WITH A FIXED NOZZLE AGENT DISTRIBUTION NETWORK. IT SHALL BE LISTED WITH UNDERWRITERS LABORATORIES, INC. (UL).

THE SYSTEM SHALL BE CAPABLE OF AUTOMATIC DETECTION AND ACTUATION WITH LOCAL OR REMOTE MANUAL ACTUATION. ACCESSORIES SHALL BE AVAILABLE FOR MECHANICAL OR ELECTRICAL GAS LINE SHUT-OFF APPLICATIONS.

THE EXTINGUISHING AGENT SHALL BE A POTASSIUM CARBONATE, POTASSIUM ACETATE-BASED FORMULATION DESIGNED FOR FLAME KNOCKDOWN AND SECUREMENT OF GREASE RELATED FIRES. IT SHALL BE AVAILABLE IN PLASTIC CONTAINERS WITH INSTRUCTIONS FOR LIQUID AGENT HANDLING AND USAGE.

THE REGULATED RELEASE MECHANISM SHALL BE COMPATIBLE WITH A FUSIBLE LINK DETECTION SYSTEM. THE FUSIBLE LINK SHALL BE SELECTED AND INSTALLED ACCORDING TO THE OPERATING TEMPERATURE IN THE VENTILATING SYSTEM. THE FUSIBLE LINK SHALL BE SUPPORTED BY A DETECTOR BRACKET/ LINKAGE ASSEMBLY.

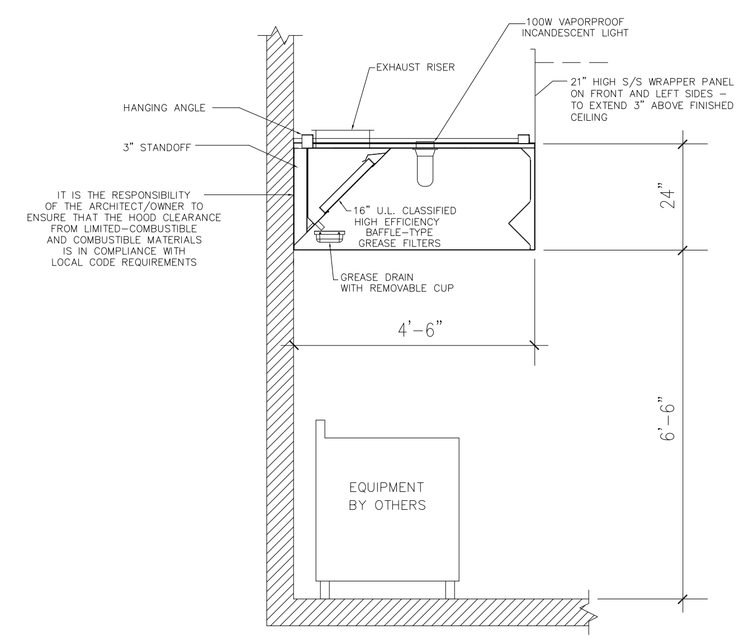

SECTION VIEW – MODEL 5424-ND-2
Section view for Hood #1

STAINLESS STEEL BACKSPLASH

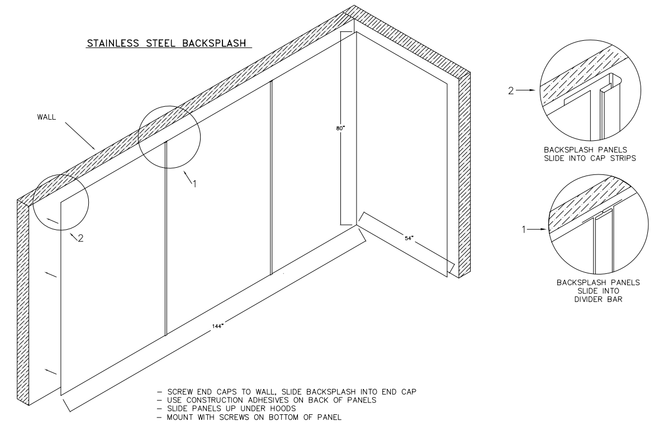

– SCREW END CAPS TO WALL, SLIDE BACKSPLASH INTO END CAP
– USE CONSTRUCTION ADHESIVES ON BACK OF PANELS
– SLIDE PANELS UP UNDER HOODS
– MOUNT WITH SCREWS ON BOTTOM OF PANEL

CALCULATIONS UTILIZED

EXHAUST CFM=LENGTH OF HOOD X CFM/LIN.FT. (LOAD)

SUPPLY CFM=EXHAUST CFM X PERCENTAGE REQUIRED

TOTAL DUCT AREA=144 X $\frac{\text{CFM}}{\text{FPM(*)}}$

DUCT LENGTH= $\frac{\text{TOTAL DUCT AREA}}{\text{DUCT DEPTH}}$

*CAPTIVE-AIRE VENTILATOR DUCT SIZES ARE CALCULATED USING AN EXHAUST VELOCITY OF 1500-1800 FPM AND A SUPPLY VELOCITY OF 700 FPM PLEASE CONSULT FACTORY FOR MAXIMUM ALLOWABLE DUCT SIZES

BUILDING CODES

CAPTIVE-AIRE HOODS ARE BUILT IN COMPLIANCE WITH:

- NFPA #96
- NSF LISTED
- B.O.C.A. #93-14
- UBC#: 24416
- SBCCI PST & CSI NO. 93137
- E.T.L. LISTED 3054804-001
- LVD MODULE: 9908060
- ETL IS LISTED TO ULC STANDARDS

1/2 Pint Grease Cup Detail

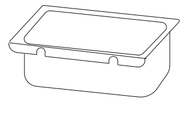

Grease cup will be supported by 2 studs on the inside wall of the hood. The grease will drain through a concealed grease trough and into this removeable cup.

ND-2 HANGING ANGLE DETAIL

1/2" DIA. ALL THREAD ROD CONNECTED TO ROOF JOIST THROUGH ANOTHER HANGING ANGLE

1/2" DIA. HEAVY DUTY NUT ONE ABOVE AND ONE BELOW HANGING ANGLE

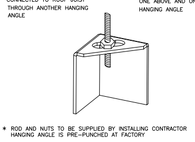

* ROD AND NUTS TO BE SUPPLIED BY INSTALLING CONTRACTOR HANGING ANGLE IS PRE-PUNCHED AT FACTORY

HANGING ANGLE LOCATIONS

HANGING ANGLES WILL BE LOCATED IN THE FOLLOWING LOCATIONS FOR WALL CANOPIES

HOOD STYLE		DIM FROM REAR	DIM FROM FRONT (24" High Hood)	DIM FROM FRONT (30" High Hood)
Wall	Exhaust Only	1.75"	11.25"	5.25"
	With MUA		2.75"	2.75"
Back Shelf	Exhaust Only	1.75"	15.0"	5.25"
	With MUA		2.75"	2.75"
Condensate		10.50"	10.50"	

Borealis Bread Cafe & Bakery

182 Ocean Ave
Portland, Maine

#	DATE	DESCRIPTION

REVISIONS

Date Issued 03/21/08

Project Number 07210

Drawing Scale

SHEET NAME
FOODSERVICE EQUIPMENT EXHAUST HOOD DETAILS

Drawn By TJM

Checked By TJM

FS-7

ELECTRICAL PACKAGES

NO.	TAG	PACKAGE #	LOCATION	SWITCHES LOCATION	SWITCHES QUANTITY	ROOFTOP STARTERS	OPTION	FANS CONTROLLED TYPE	ø	H.P.	VOLT.	FLA
1		21011028	Utility Cabinet Left Hood # 1	Utility Cabinet Left Hood # 1	1 Light 1 Fan		Exhaust in Fire Relay w/ 2-DPDT on/off w/ Sup Fan	Exhaust	1	1.500	230	10.2

HOOD INFORMATION

HOOD NO.	MODEL	LENGTH	MAX. COOKING TEMP.	EXHAUST PLENUM TOTAL EXH. CFM	RISER(S) WIDTH	LENG.	DIA.	CFM	S.P.	SUPPLY PLENUM TOTAL SUP. CFM	RISER(S) WIDTH	LENG.	DIA.	CFM	S.P.	HOOD CONSTRUCTION	HOOD CONFIG. END TO END	ROW
1	5424 ND-2	11' 0.00"	450 Deg.	2475	10"	23"		2475	-0.998"	0						430 SS Where Exposed	ALONE	ALONE

HOOD INFORMATION

HOOD NO.	FILTER(S) TYPE	QTY.	HEIGHT	LENGTH	LIGHT(S) QTY.	TYPE	WIRE GUARD	LOCATION	UTILITY CABINET(S) FIRE SYSTEM TYPE	SIZE	ELECTRICAL MODEL #	SWITCHES QUANTITY	LOCATION	FIRE SYSTEM PIPING	HOOD WEIGHT
1	Stainless Steel (High E	2	16"	16"	4	Incandescent Light Fixt	NO	Left			21011028	1 Light 1 Fan	Outside	NO	704 LBS
		5	16"	20"											

HOOD OPTIONS

HOOD NO.	OPTION
1	BACKSPLASH 80.00" High X 144.00" Long 430 SS
	BACKSPLASH – INSIDE CORNER 80.00" High X 4.00" Long 430 SS
	RIGHT SIDESPLASH 80.00" High X 54.00" Long 430 SS
	FIELD WRAPPER 21.00" High Front, Left,
	RIGHT END STANDOFF 3" Wide

Centrifugal Upblast Belt (Fan #1 NCA18HPFA)

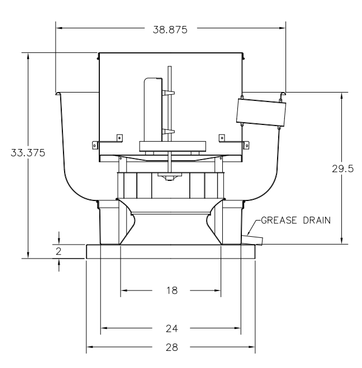

FEATURES:

- ROOF MOUNTED FANS
- RESTAURANT MODEL
- UL762 – UL705
- AMCA SOUND AND AIR CERTIFIED
- WIRING FROM MOTOR TO DISCONNECT SWITCH
- WEATHERPROOF DISCONNECT
- HIGH HEAT OPERATION 300°F (149°C)
- GREASE CLASSIFICATION TESTING

NORMAL TEMPERATURE TEST
EXHAUST FAN MUST OPERATE CONTINUOUSLY WHILE EXHAUSTING AIR AT 300°F (149°C) UNTIL ALL FAN PARTS HAVE REACHED THERMAL EQUILIBRIUM, AND WITHOUT ANY DETERIORATING EFFECTS TO THE FAN WHICH WOULD CAUSE UNSAFE OPERATION.

ABNORMAL FLARE-UP TEST
EXHAUST FAN MUST OPERATE CONTINUOUSLY WHILE EXHAUSTING BURNING GREASE VAPORS AT 600°F (316°C) FOR A PERIOD OF 15 MINUTES WITHOUT THE FAN BECOMING DAMAGED TO ANY EXTENT THAT COULD CAUSE AN UNSAFE CONDITION.

OPTIONS:

GREASE BOX
HINGED FAN

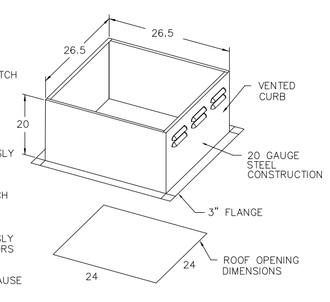

FAN INFORMATION

FAN UNIT NO.	MODEL	TAG	EXHAUST CFM	SUPPLY CFM	S.P.	RPM	H.P.	PHASE	VOLT	FLA	WEIGHT LB	SHAFT DIA.	SONES
1	NCA18HPFA		2475	0	1.500	1145	1.500	1	230	10.2	172.03	0.750	13.9

amca CERTIFIED RATINGS SOUND AND AIR PERFORMANCE
AIR MOVEMENT AND CONTROL ASSOCIATION INTERNATIONAL, INC.