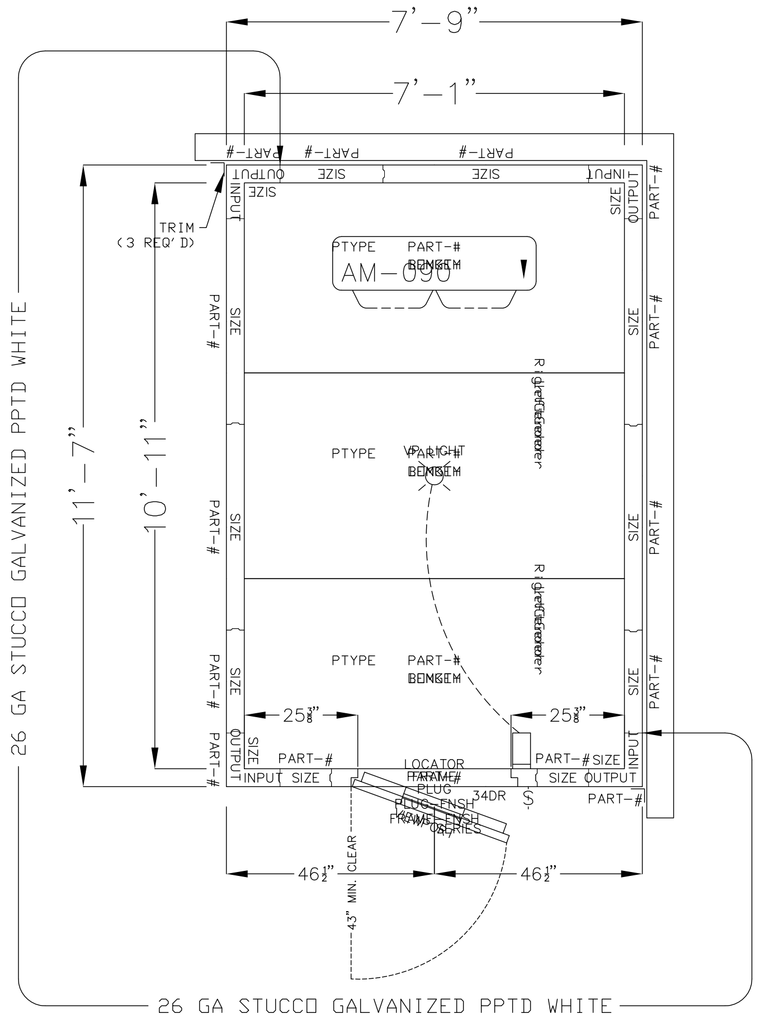

COOLER

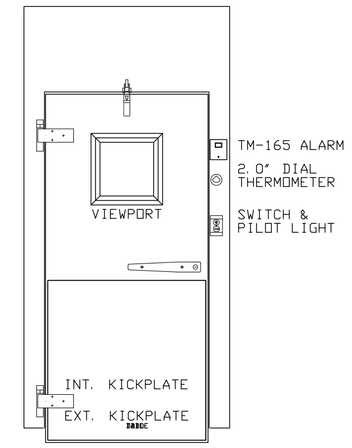

DOOR 68789A05050505
THRESHOLD DETAIL 50
46x94.25DS 34x78 DR LH SCD CLR
FRAME=26GW/26GW PLUG=26GW/26GW

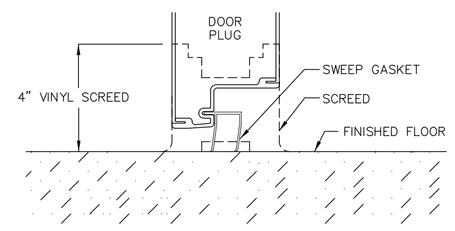

FLOORLESS COOLER WITH
4" VINYL FOAM SCREED
DETAIL 50

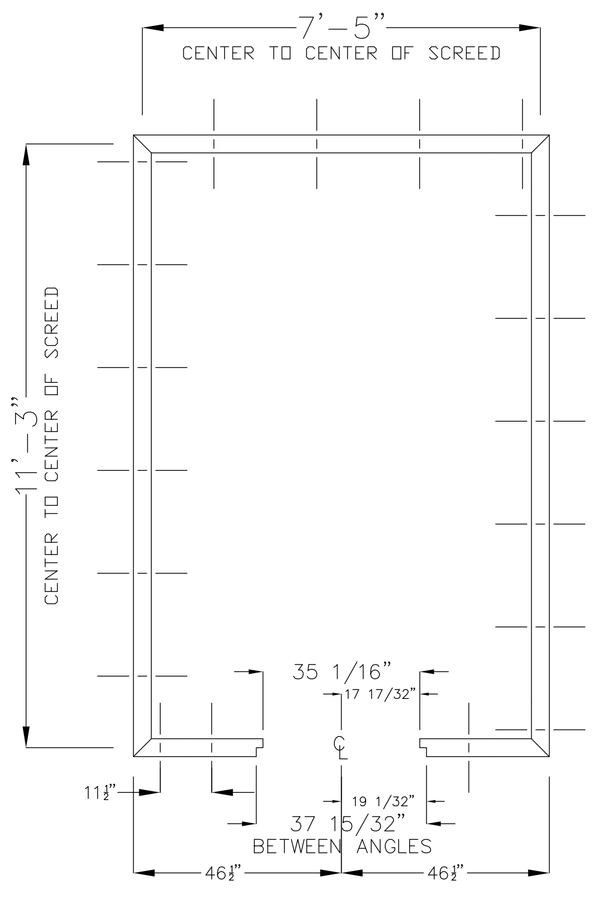

SCREED-NOTE
SLEEPERNOTE
PIECES PIECESNOTEY LINFT

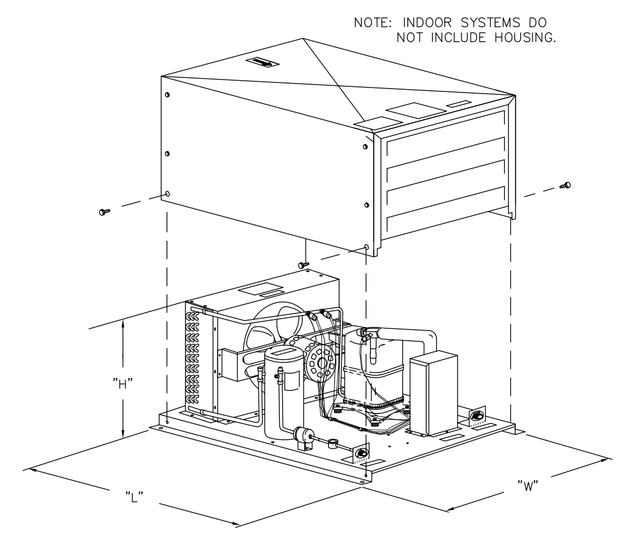

HERMETIC AIR COOLED CONDENSING UNIT DETAIL
Medium Temp - 1/2HP TO 1-1/2HP
Low Temp - 3/4HP to 2HP

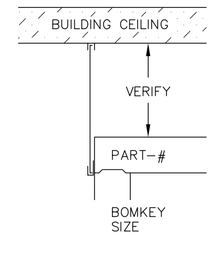

Note!

- CLOSURE WILL BE THE SAME FINISH AS WALK-IN
- BOTTOM RAIL IS SECURED WITH SHEET METAL SCREWS BY KOLPAK
- TOP RAIL IS SECURED VIA SUITABLE METHOD BY INSTALLER
- DIMENSION FROM TOP OF FINISHED WALK-IN TO INTERIOR CEILING MUST BE VERIFIED BEFORE FABRICATION

WALK-IN SPECIFICATIONS

SIZE: 7'-9" X 11'-7" X 8'-6 1/4"

PANELS:

ALL FOAMED PANELS ARE 4"

EXTERIOR FINISH:

AS SHOWN - 26 GA STUCCO GALVANIZED PPTD WHITE
BALANCE - 26 GA STUCCO GALVANIZED
EXTERIOR TOP - 26 GA STUCCO GALVANIZED

INTERIOR FINISH:

WALLS: 26 GA STUCCO GALVANIZED PPTD WHITE
COOLER CEILING: 26 GA STUCCO GALVANIZED PPTD WHITE

FLOOR TYPE:

COOLER - 4" VINYL FOAM SCREED

HEIGHT:

OD 8'-6 1/4" ID 8'-2 1/4"

DOORS:

DOOR 68789A05050505
46x94.25DS 34x78 DR LH SCD CLR
FRAME=26GW/26GW PLUG=26GW/26GW
115-60-1/2.4 AMPS

ACCESSORIES:

(1) LOT, CLOSURE PANEL (VERIFY HEIGHT & LOCATION)
(3) TRIM STRIP - 3X3X96 26 GALVANIZED-WHITE
(1) LIGHT, EX VAPOR PROOF W/OUT BULB
(1) KICKPLATE .063 TREAD 36"DR EXT
(1) KICKPLATE .063 TREAD 36"DR INT
(1) TM165 ALARM W/6' LEAD LENGTH
(1) VIEWPORT, 14X14 COOLER

REFRIG: AIR COOLED / PRE-ASSEMBLED REMOTE

HERMETIC
PR95M 1hp R-22 208/230-60-1 8.3 AMPS
L=33", W=25 1/2", H=19 1/4", LBS.=244
AM-090 EVAPORATOR 115-60-1 3.6 AMPS
L=45.5", W=14.88", H=16", LBS.=48
OUTDOOR PACKAGE
SPECIAL 1 TIER COMPRESSOR RACK (18" LEGS)

IMPORTANT NOTES:

1) ALLOW MINIMUM 1" CLEARANCE ALL AROUND WALK-IN.
2) WALK-IN CEILING IS NOT DESIGNED FOR FOOT TRAFFIC OR STORAGE.
3) GENERAL CONTRACTOR TO REFER TO DESIGN AND SPECIFICATIONS MANUAL FOR FLOOR DETAIL INFORMATION.
4) SPECIAL NOTE TO GENERAL CONTRACTOR AND SUBCONTRACTOR FOR QUARRY TILE OR CONCRETE WEARING FLOOR - THE SHEET METAL PANEL FACINGS MAY BE SUSCEPTABLE TO STAINING DUE TO EXCESSIVE MOISTURE CREATED BY THE HYDRATION OF CONCRETE TYPE MATERIALS. THEREFORE, IT IS ABSOLUTELY NECESSARY THAT EACH ROOM BE PROPERLY VENTILATED. ALSO NOTE THAT SPECIAL PRECAUTIONS MUST BE TAKEN WHEN USING MURIC ACID DUE TO EFFECTS HYDROCHLORIC ACID FUMES HAVE ON ALUMINUM AND STAINLESS STEEL MATERIALS.
5) THIS DRAWING IS FOR APPROVAL PURPOSES ONLY AND IS NOT TO BE USED FOR INSTALLATION OF THIS WALK-IN. AN "AS-BUILT" DRAWING IS PROVIDED WITH EACH SHIPPED WALK-IN.

PORT CITY ARCHITECTURE
65 NEWBURY STREET
PORTLAND, ME 04101
207.761.9000
fax: 207.761.2010
info@portcityarch.com

Borealis Bread
Cafe & Bakery
182 Ocean Ave
Portland, Maine

#	DATE	DESCRIPTION

REVISIONS

Date Issued 03/21/08
Project Number 07210
Drawing Scale

SHEET NAME
FOODSERVICE EQUIPMENT
WALK-IN COOLER DETAILS

Drawn By TJM
Checked By TJM

FS-6