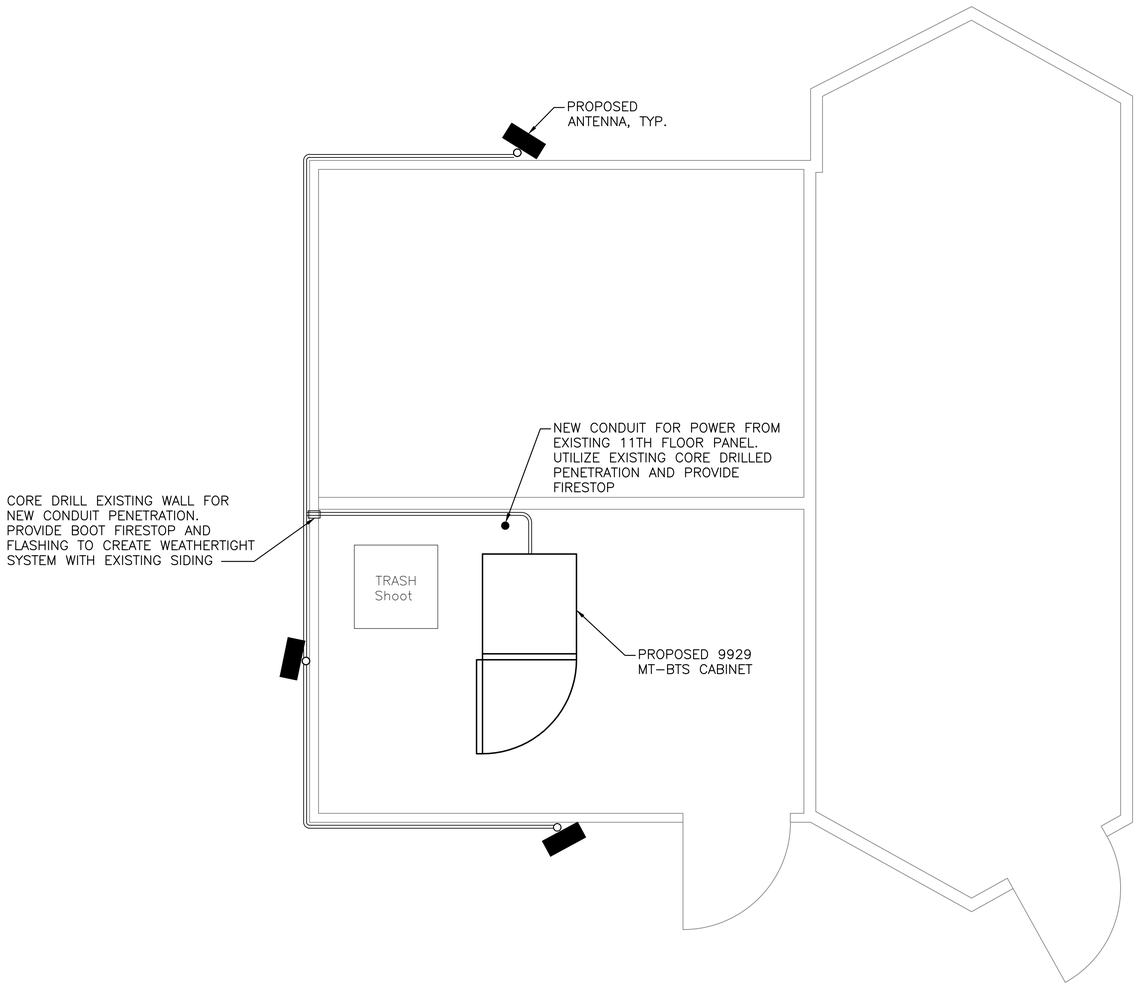

1 / A-2 EXISTING EQUIPMENT ROOM LAYOUT

SCALE: 1/2"=1'

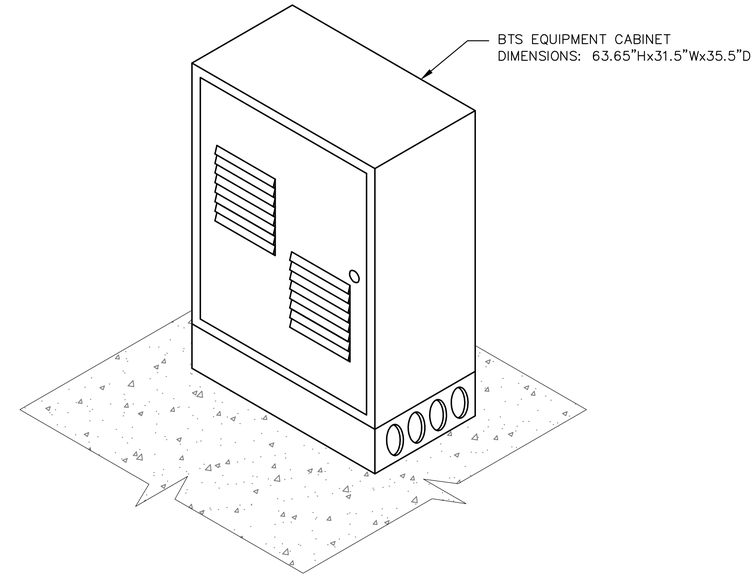

4 / A-2 PROPOSED BTS CABINET ELEVATION

SCALE: N.T.S.

TILSON
245 Commercial Street Suite 203
Portland, ME 04101
P: (207) 591-6427 F: (207) 772-3427

amec
511 Congress Street Suite 200, Portland, ME 04101
P: (207) 775-5401 F: (207) 772-4762 www.amec.com

APPLICANT:

redZone WIRELESS

SURVEYOR

FOR COMMENT

MICHAEL S. DELETETSKY No. 5023 LICENSED PROFESSIONAL ENGINEER

PROJECT NO: 3618158517

DRAWN BY: CBM

RELEASED BY: MSD

SUBMITTALS

0	XX/XX/15	ISSUED FOR CONSTRUCTION

DEERING PAVILION

880 FOREST AVE
PORTLAND, ME 04103

SHEET TITLE

EQUIPMENT ROOM LAYOUT
AND CABINET ELEVATION

SHEET NUMBER

A-2

0 1 2 3
ORIGINAL SIZE IN INCHES