PRINTED: Feb 06, 2015

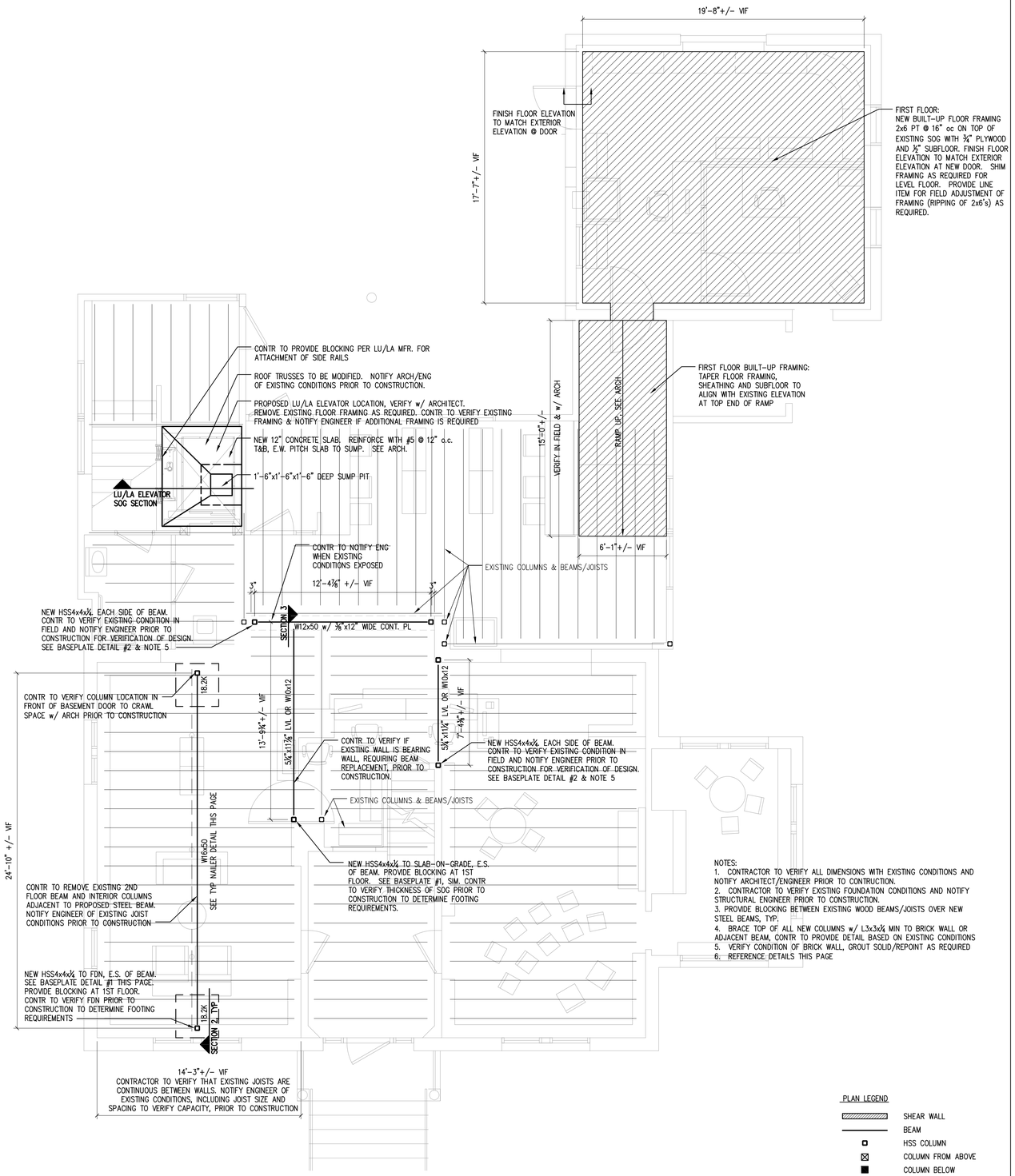

NOTES:
1. CONTRACTOR TO VERIFY ALL DIMENSIONS WITH EXISTING CONDITIONS AND NOTIFY ARCHITECT/ENGINEER PRIOR TO CONTRUCTION.
2. CONTRACTOR TO VERIFY EXISTING FOUNDATION CONDITIONS AND NOTIFY STRUCTURAL ENGINEER PRIOR TO CONSTRUCTION.
3. PROVIDE BLOCKING BETWEEN EXISTING WOOD BEAMS/JOISTS OVER NEW STEEL BEAMS, TYP.
4. BRACE TOP OF ALL NEW COLUMNS w/ L3x3x¼ MIN TO BRICK WALL OR ADJACENT BEAM, CONTR TO PROVIDE DETAIL BASED ON EXISTING CONDITIONS
5. VERIFY CONDITION OF BRICK WALL, GROUT SOLID/REPOINT AS REQUIRED
6. REFERENCE DETAILS THIS PAGE

FOUNDATION / SECOND FLOOR FRAMING PLAN

SCALE: 1/4"=1'-0"

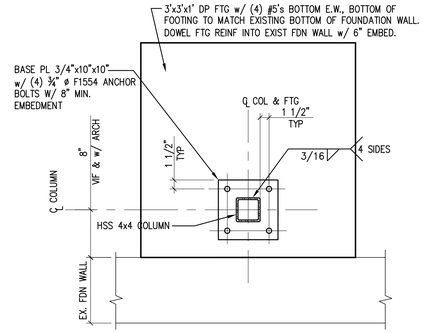

NOTE:
VERIFY EXISTING CONDITIONS IN FIELD & NOTIFY ENGINEER PRIOR TO CONSTRUCTION

BASEPLATE DETAIL #1 @ BASEMENT SLAB
SCALE 1"=1'-0"

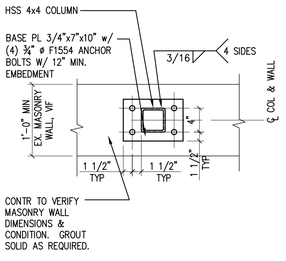

NOTE:
VERIFY EXISTING CONDITIONS IN FIELD & NOTIFY ENGINEER PRIOR TO CONSTRUCTION

BASEPLATE DETAIL #2 @ EX. MASONRY WALL
SCALE 1"=1'-0"

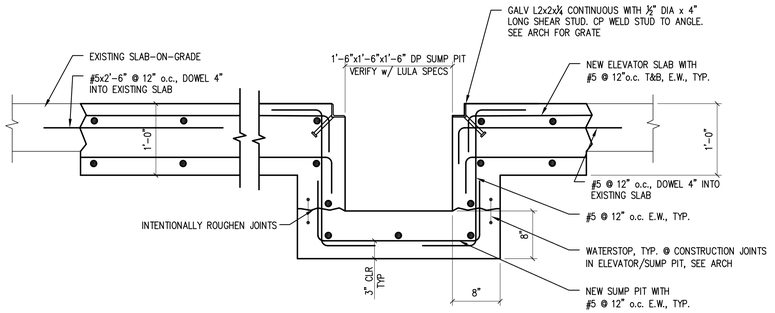

SECTION #1– SLAB-ON-GRADE @ LU/LA ELEVATOR
SCALE 1"=1'-0"

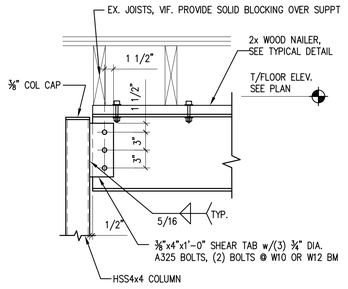

SECTION 2
TYPICAL BEAM TO COL CONNECTION

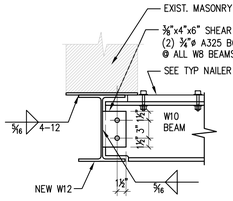

NOTES:
1. SEE TYP NAILER DETAIL THIS PAGE
2. EXISTING JOISTS NOT SHOWN FOR CLARITY. PROVIDE SOLID BLOCKING OVER SUPPT

SECTION 3
TYPICAL BEAM TO BEAM CONNECTION

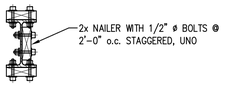

NOTE:
1. SEE ARCHITECTURAL DRAWINGS FOR NAILER CONFIGURATION

TYPICAL NAILER DETAIL

SCALE: NTS, UNO

LDD PROJECT NAME: N/A
DRAWING NAME:
FIELD BOOK USED: N/A

Scott Simons Architects
22 Chatham Street, Portland, Maine 04101
www.simonsarchitects.com
207.772.4556

424 Fore Street
Portland, ME 04101
Phone 207.842.2800
Fax 207.842.2828
www.cascobayengineering.com

REFERENCES:

DESIGNED BY: CCB	DRAWN BY: CCB
CHECKED BY: PR	SCALE: AS NOTED
DATE: 2-6-15	

STATE OF MAINE
CAROLYN C. BIRD
No. 9956
LICENSED
PROFESSIONAL ENGINEER

PORTLAND PUBLIC LIBRARY
BURBANK BRANCH

377 Stevens Avenue
Deering Center
Portland, Maine 04103

CITY OF PORTLAND, MAINE
Addition + Renovation for
The Burbank Branch Library

ISSUED FOR PERMITTING

FOUNDATION / SECOND FLOOR FRAMING PLAN & SECTIONS/ DETAILS

SHEET #
S100

PLAN NUMBER