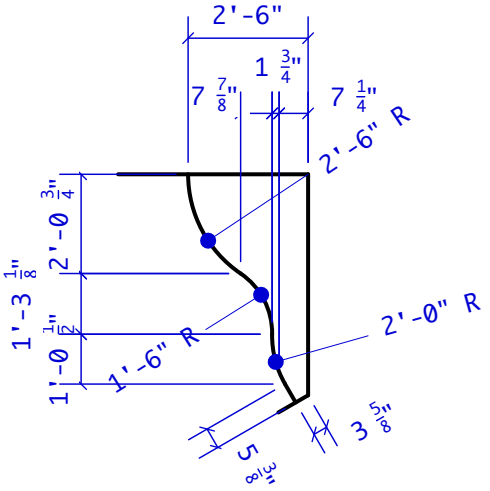

2 COUNTERTOP SHAPE DETAIL
SCALE: 1/4"=1'-0"

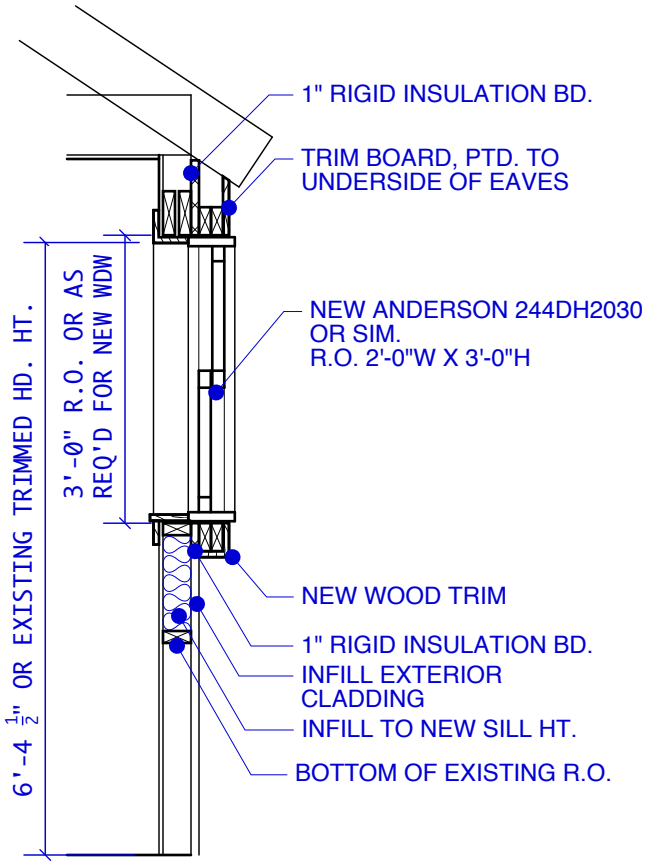

3 WINDOW ELEVATION DETAIL
SCALE: 1/4"=1'-0"

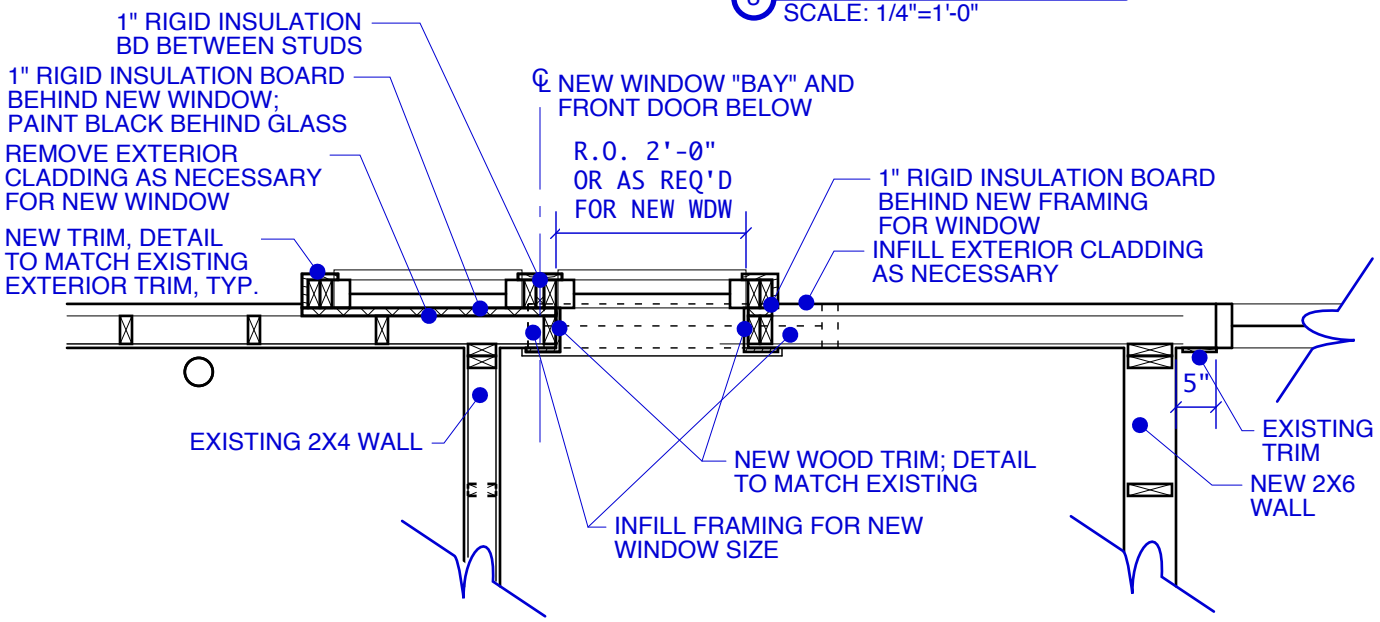

1 WINDOW PLAN DETAIL
SCALE: 1/2"=1'-0"

SCHMIDT/LESHER RESIDENCE
60 BERKELEY STREET
PORTLAND, ME 04103

A-2 MASTER BATH ADDITION - DETAILS

SCALE: 1/4"=1'-0"
JANUARY 12, 2015

LYNN SHAFFER Architecture by Design
www.lynnshafferarchitect.com
lynn@lynnshafferarchitect.com
650 Shore Road | Cape Elizabeth, ME 04107 w207.899.0588 c207.233.1888