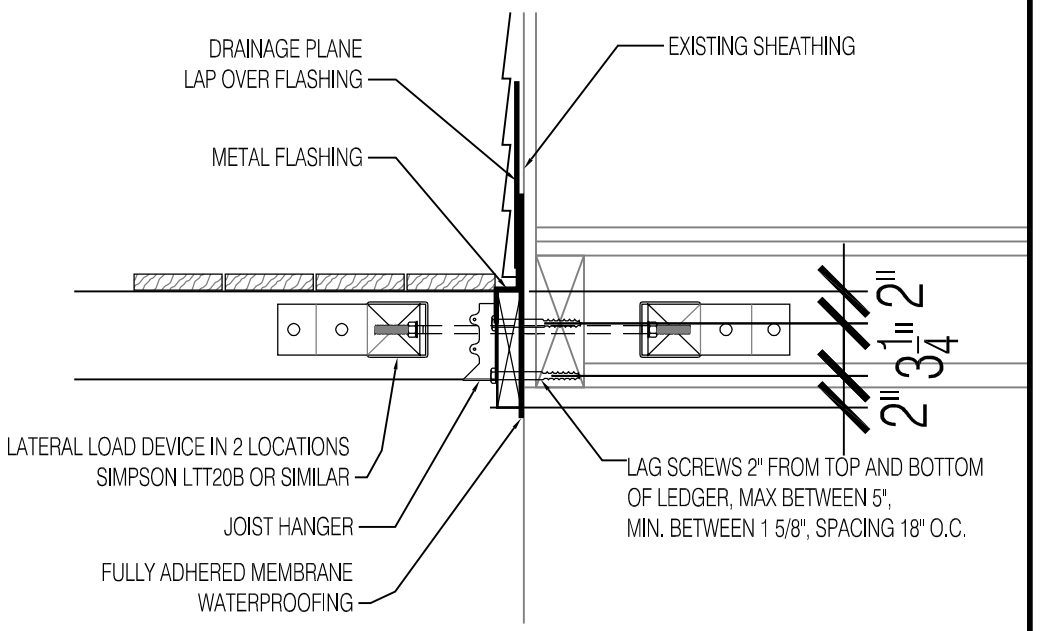

1 TYP. DECK LEDGER ATTACHMENT
1" = 1'-0"

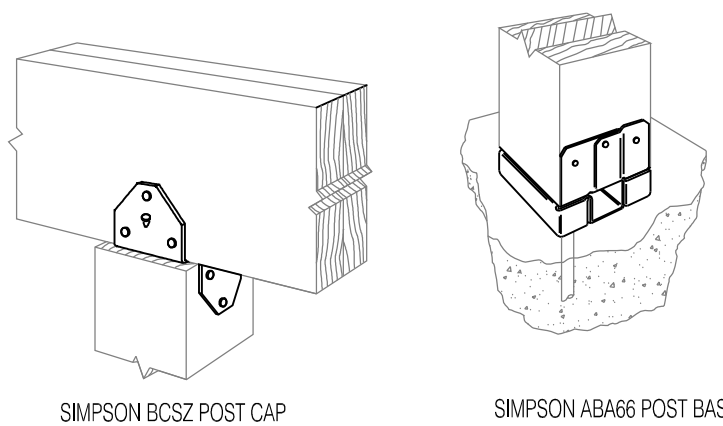

2 TYP. DECK POST ATTACHMENT
1" = 1'-0"

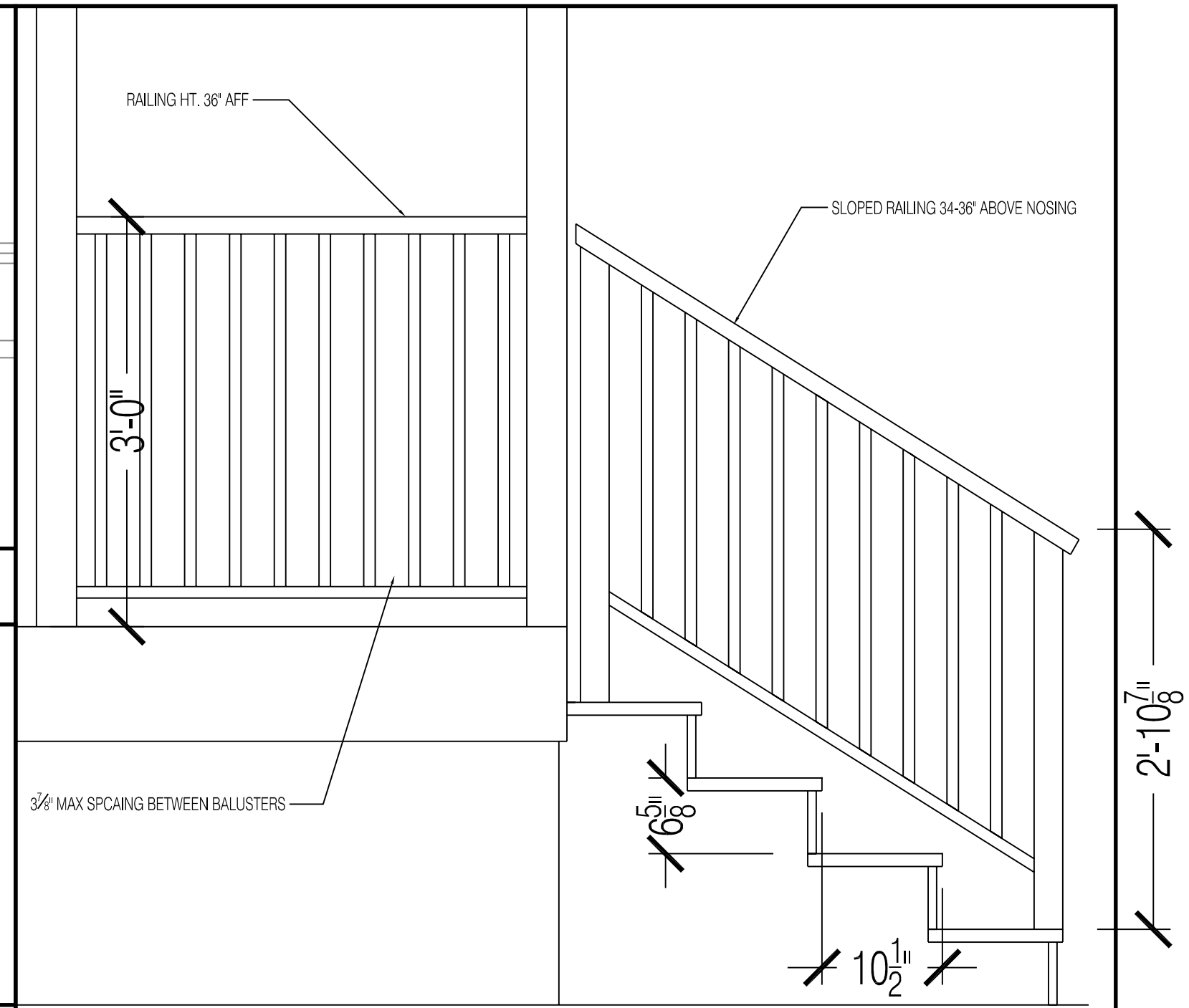

3 TYP. STAIR DETAIL
1" = 1'-0"

PROSPECT DESIGN
58 FORE ST, PORTLAND, ME
www.prospectdesign.me
T: 207 - 749 - 7400

HEMESphere DESIGN
Architecture
58 Fore Street
Portland, ME 04101
207.232.6079
joe@hemespheredesign.com
www.hemespheredesign.com

REGISTERED ARCHITECT
STATE OF MAINE

DETAILS
DODGE

DATE: 3.15.2017
DRAWN BY: BB

A8