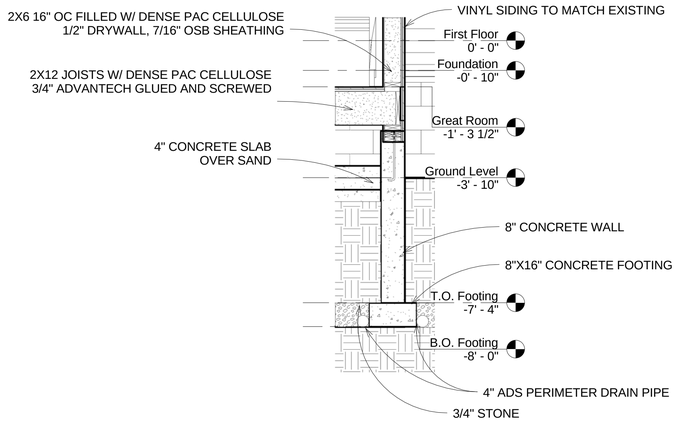

1 Callout of Section 1
1/2" = 1'-0"

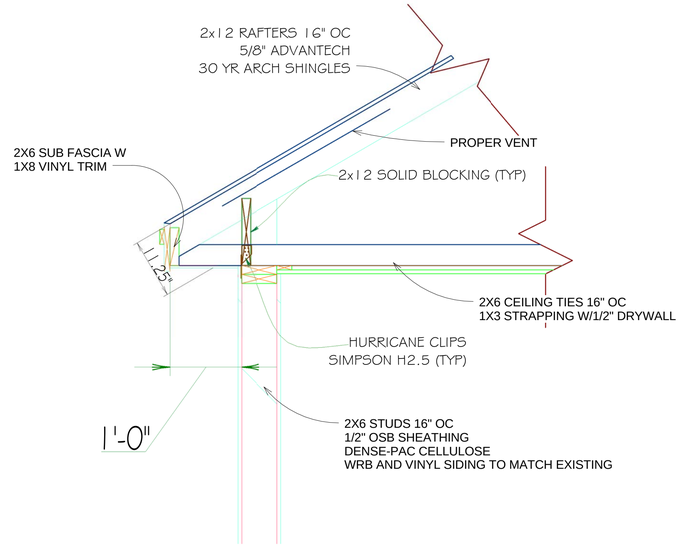

2 Rafter Anchor Detail
1" = 1'-0"

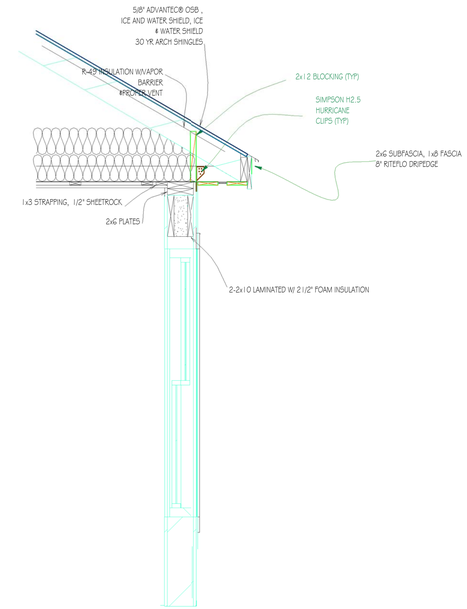

3 Soffit Detail
3/4" = 1'-0"

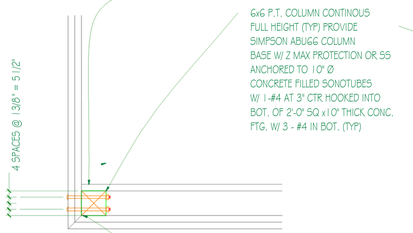

SECTION A-A

3/4" = 1'-0"

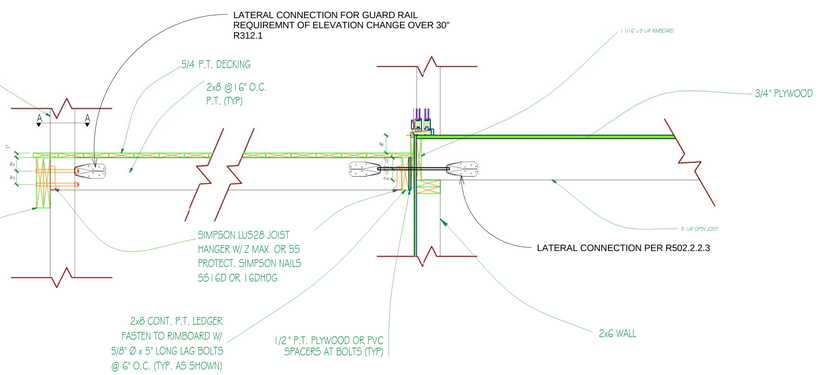

TYP. EXT. DECK FRAMING

3/4" = 1'-0"

4 TYP EXT DECK FRAMING
3/4" = 1'-0"

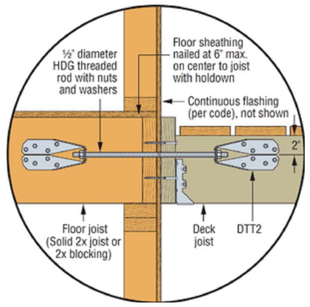

Lateral Connection R502.2.2.3

SEE COVER SHEET FOR GENERAL NOTES

INFORMATION SHOWN ON THE COVER SHEET APPLIES TO ALL TRADES FOR THE WORK OF THIS PROJECT, AND INCLUDES TYPICAL NOTES AND SPECIFIC CODE REQUIREMENTS FOR THOSE TRADES.

CONTRACTOR SHALL MEASURE AND VERIFY ALL DIMENSIONS AT THE WORK.

THIS DRAWING IS A PART OF A FULL SET OF DRAWINGS COMPRISING THE CONTRACT DOCUMENTS FOR THE WORK OF THIS PROJECT. THE DESIGNER/OWNER ACCEPTS NO RESPONSIBILITY FOR THE CONTRACTORS' ERRORS OR OMMISIONS IF EACH TRADE DOES NOT HAVE THE FULL SET OF DRAWINGS AND SPECIFICATIONS.

COPYRIGHT

THE MATERIAL CONTAINED IN THESE DRAWINGS AND THE DESIGN THEY ARE INTENDED TO CONVEY ARE THE EXCLUSIVE PROPERTY OF Chretien Construction Inc. POSSESSION AND USE HEREOF IS GRANTED ONLY CONFIDENTIALLY IN CONNECTION WITH CONSTRUCTION OF THE BUILDING DEPICTED HEREIN AS AUTHORIZED BY Chretien Construction Inc. . THE RECIPIENT AGREES TO ABIDE BY THESE RESTRICTIONS. ANY USE, REPRODUCTION OR DISCLOSURE OF ANY INFORMATION, IN WHOLE OR IN PART, CONTAINED HEREIN, WITHOUT WRITTEN PERMISSION OF Chretien Construction Inc., IS EXPRESSLY PROHIBITED.

CHRETIEN CONSTRUCTION INC
CARL M CHRETIEN SR
35 BERRY RD
SACO, ME 04072
207-284-5843

CHRETIEN
CONSTRUCTION INC.
QUALITY CONSTRUCTION
FROM START TO FINISH
1-207-284-5843

carl-ch@chretienconstructioninc.com

Consultant
Address
Address
Phone
Fax
e-mail

Consultant
Address
Address
Phone
Fax
e-mail

Consultant
Address
Address
Phone
Fax
e-mail

Consultant
Address
Address
Phone
Fax
e-mail

No.	Description	Date

Member
NAHB National Association of Home Builders
NFPA MEMBER
MEMBER ICC INTERNATIONAL CODE COUNCIL®

Diana & Jason Nelson

Nelson Remodel

88 Codman
Portland ME

DETAILS

COPYRIGHT 2005:	CHRETIEN CONSTRUCTION INC
PROJECT NUMBER:	20114
DATE:	8/22/11
DRAWN BY:	CARL M CHRETIEN
CHECKED BY:	CMC

A-502

SHEET INDEX:	11
TOTAL SHEETS:	17
SCALE:	As indicated

9/29/2011 6:44:13 PM

X:\Nelson\Nelson4-2.rvt