## PHARMACY (REAR DRIVE-THRU) LAYOUT (42'-9" X 33'-0" I.D.) - POWER AND SYSTEMS DETAIL

1. NOT USED.
2. SEE DETAILS 1,4 & 5/E4.4 FOR CASH REGISTER OUTLET MOUNTING INFORMATION.
3. ETHERNET (CATEGORY 5) CABLES. SEE DRAWING E1.3 FOR FURTHER INFORMATION.
4. HEXAGON SYMBOL WITH NUMBER DESIGNATION CORRESPONDS TO KEY NOTE REFERENCED ON DRAWING E1.2 (NOTED ON THIS SHEET).

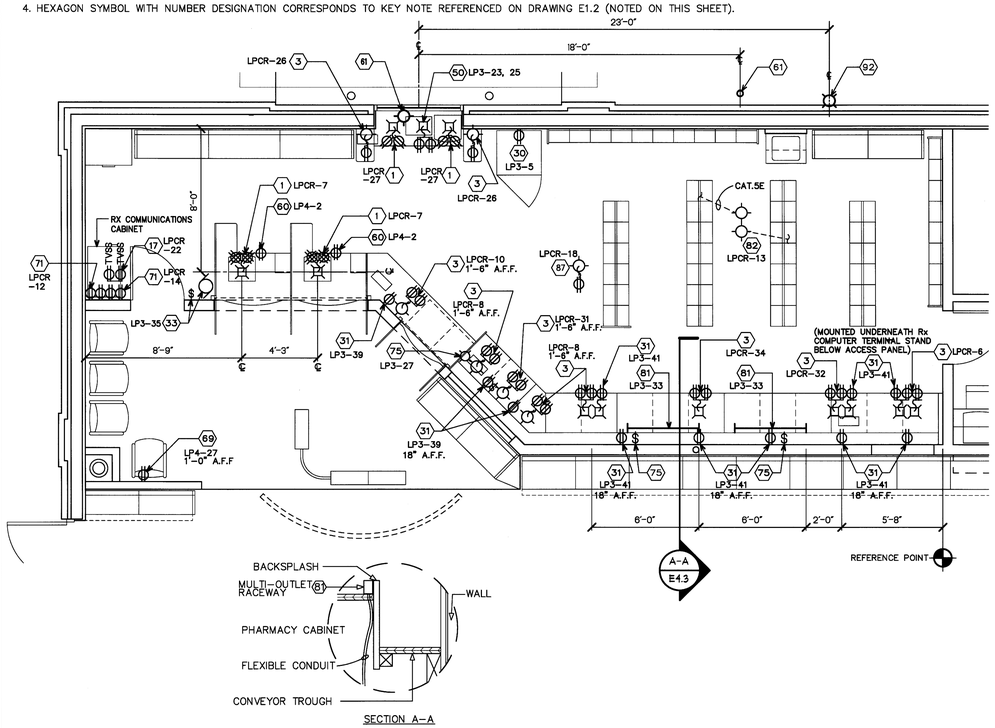


POWER KEYED NOTES:

1. ONE(1) 20A.120V.1PH. CIRCUIT FOR CASH REGISTER (CR) LOCATION. SEE DETAILS 6, 7 & 10/E4.3, 1, 4 &/OR 5/E4.4 FOR OUTLET MOUNTING. HOMERUN BACK TO PANEL "LP-CR".
3. ONE(1) 20A.120V.1PH.CIRCUIT FOR PHARMACY TERMINAL RECEPTACLES, CIRCUIT FROM PANEL "LP-CR". SEE DETAIL 10/E4.4 AND DETAIL 2/E4.3 FOR MOUNTING REFERENCE.
17. ONE(1) 20A.120V.1PH. SATELLITE DIGITAL INTERFACE UNIT (DIU) CIRCUIT FROM PANEL "LP-CR". SEE DETAIL 13/E4.4 FOR ADDITIONAL INFORMATION.
30. 500W OUTLET, RECEPTACLE 1'-6" A.F.F. FOR PHARMACY BIOLOGICAL REFRIGERATOR. PROVIDE LOCK-ON CIRCUIT BREAKER.
31. 200W OUTLET, RECEPTACLE 3'-9" A.F.F. FLUSH ABOVE WORK COUNTER. UNLESS OTHERWISE NOTED. SEE DETAIL 2/E4.3.
33. 1.5A. 120V OUTLET ABOVE PHARMACY CEILING FOR MOTORIZED ROLL DOWN SHUTTER, WITH SWITCH (FURNISH W/ UNIT) MOUNTED 3'-8" UP AS SHOWN, UNLESS NOTED OTHERWISE.
50. TWO(2) 20A.120V CIRCUITS FOR DRIVE-THRU WINDOW AUDIO SYSTEM AND DRIVE ALERT. MOUNT JUNCTION BOX 1'-6" A.F.F. INSIDE DRIVE-THRU WINDOW UNIT. SEE DETAIL 1/E4.3.
60. 200W OUTLET, WITH RECEPTACLE MOUNTED INSIDE CASH REGISTER STAND. REFER TO DETAILS 1, 4, AND/OR 5 ON DRAWING E4.4 FOR OUTLET MOUNTING.
61. DRIVE ALERT SYSTEM - ELECTRICAL CONTRACTOR TO FURNISH AND INSTALL MODEL DA-500 WITH DA-655 DRIVE ALERT CHIME, (CHIME MOUNTED ABOVE DRIVE-THRU WINDOW). INSTALL DRIVE-ALERT SENSOR IN THE CONCRETE CURB ALONG DRIVE-THRU WALL AS SHOWN ON DRAWING A4.4. SYSTEM SHALL BE PURCHASED FROM A.D.I. DISTRIBUTORS AT (800) 388-9505. [ NOTE: ONCE INSTALLED, ELECTRICAL CONTRACTOR SHALL TEST THE SYSTEM BY DRIVING A VEHICLE IN THE DRIVE-THRU LANE. ADJUST "SENSITIVITY" AND "BLANKER" POTS AS REQUIRED UNTIL SYSTEM DETECTS THE VEHICLE ACCORDINGLY.]
62. NOT USED
69. 200W GENERAL PURPOSE DUPLEX RECEPTACLE, MOUNTED AT 1'-6" A.F.F., UNLESS NOTED OTHERWISE.
71. TWO (2) 20A.120V.1PH. CIRCUITS FROM PANEL "LP-CR" FOR RX COMMUNICATION EQUIPMENT RECEPTACLES.
75. ONE (1) 20A.120V.1PH. CIRCUIT TO OUTLET, 1'-0" A.F.F. FOR CONVEYOR. BALDOR DRIVE MOTOR WITH SCR (SPEED CONTROL) BY CONVEYOR MFG, FINAL CONNECTION BY ELECTRICAL CONTRACTOR. ELECTRICAL CONTRACTOR TO FURNISH AND INSTALL THREE (3) HUBBELL NO.CS1221 SWITCHES WIRED IN SERIES AND EQUALLY SPACED ALONG COUNTER AT 3'-8" A.F.F., SEE PHARMACY COUNTER ELEVATION DETAIL 2/E4.3.
81. 1000 W OUTLET WITH SOLID CONNECTION TO 4'-0" MULTI-OUTLET RACEWAY ASSEMBLY (PLUGMOLD OR PLUGTRAK). MOUNT ON Rx "FILLING" COUNTER BACKSPLASH (RACEWAY FLUSH WITH TOP OF BACKSPLASH). RECEPTACLES SHALL BE 6" ON CENTER.
82. ONE(1 20A.120V.1PH CIRCUIT FROM PANEL "LP-CR" (WITH WIRES COILED INSIDE JUNCTION BOX) MOUNTED ABOVE CEILING FOR FUTURE PHARMACY ROBOTICS POWER. (COORDINATE W/ REFLECTED CEILING PLAN)
87. ONE (1) 20A.120V.1PH. CIRCUIT FROM PANEL "LP-CR" FOR CCTV CAMERA, CONNECT TO DUPLEX RECEPTACLE MOUNTED ABOVE PHARMACY CEILING.
92. ELECTRICAL CONTRACTOR TO FURNISH AND INSTALL ONE (1) WEATHERPROOF JUNCTION BOX (RECESS MOUNT) WITH BLANK COVERPLATE AND 1" CONDUIT STUB INSIDE PHARMACY, BELOW DRIVE-THRU WINDOW FOR FUTURE INTERCOM GREETING STATION.

1 / E4.3

## PHARMACY COUNTER ELECTRICAL ELEVATION

NOTES:

1. THIS ELEVATION CORRELATES TO THE PARTIAL FLOOR PLAN AT LEFT. UTILIZE EXACT CONFIGURATION OF EQUIPMENT BASED ON THE ACTUAL "D-1" PLAN.
2. NOT USED.
3. FOR ADDITIONAL INFORMATION ON POWER AND LOW VOLTAGE CABLING WORK ASSOCIATED WITH ELECTRONIC, COMPUTER, AND SATELLITE SYSTEMS REFER TO DRAWINGS E4.2 THRU E4.4.
4. SEE ELECTRICAL PLAN (E1.2) AND SYSTEMS PLANS (E1.3 THRU E1.6) FOR ROUTING OF LOW VOLTAGE CABLING AND/OR LOCATION OF STUB-UPS, RECEPTACLES, TELEPHONE OUTLETS AND SYSTEMS WIRING. STUB-UPS SHOWN IN THIS ELEVATION ARE FOR INFORMATION ONLY.
5. HEIGHT DIMENSIONS ARE SUITABLE FOR PHARMACIES WITH OR WITHOUT RAISED FLOOR, AND IS REFERENCED FROM SALES AREA FINISHED FLOOR.

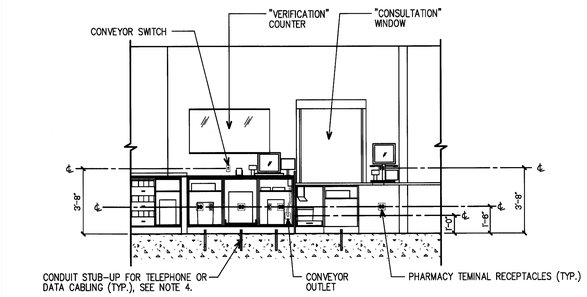


### PHARMACY PICK-UP, CONSULTATION, AND VERIFICATION COUNTER ELEVATION

SCALE: 1/4" = 1'-0"

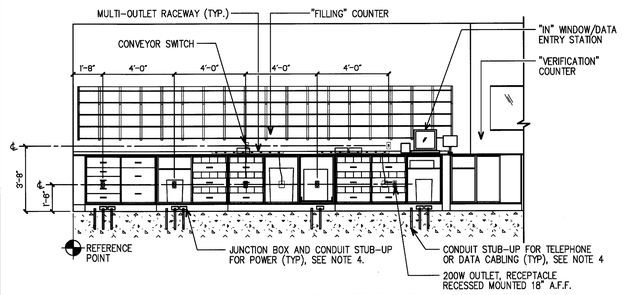


### PHARMACY VERIFICATION AND FILLING COUNTER ELEVATION

SCALE: 1/4" = 1'-0"

2 / E4.3


MOESER & ASSOCIATES
206 AYER ROAD HARVARD, MA 978-456-6905
ARCHITECT


DRAWINGS/SPECIFICATIONS BY:
- ☐ WALGREENS'
- ■ LANDLORD'S CONSULTANT

ALL CONSTRUCTION WORK, UNLESS NOTED OTHERWISE, BY:
- ☐ WALGREENS' CONTRACTOR
- ■ LANDLORD'S CONTRACTOR (TURNKEY CONSTRUCTION)

| STORE | | BUILDING | |
|---|---|---|---|
| NEW | ■ | NEW | ■ |
| REMODELING | ☐ | EXISTING | ☐ |
| RELOCATION | ☐ | NEW SHELL ONLY | ☐ |
| OTHERS | ☐ | | |

### RX & PHOTO CASH REGISTER CIRCUIT STUB-UP DETAIL

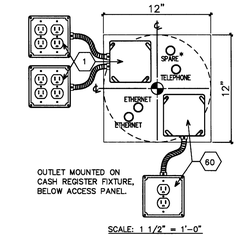


SCALE: 1 1/2" = 1'-0"

* - ONLY ONE(1) LOW VOLTAGE SPARE CONDUIT IS REQUIRED PER CASH REGISTER STAND OR ISLAND.

| RX SERVICES: | PHOTO SERVICES: |
|---|---|
| 1-CHECKPOINT | 1-CHECKPOINT |
| 2-REGISTER | 2-REGISTER |
| 3-PC | 3-PC |
| 4-MONITOR | 4-MONITOR |
| 5-VISION | 5-CATALINA |
| 6-CATALINA | 6-TMBB PRINTER |
| 7-SPARE | 7-SPARE |
| 8-SPARE | 8-SPARE |

10 / E4.3

## OFFICE LAYOUT - POWER AND SYSTEMS DETAIL

NOTES:

1. NOT USED.
2. NOT USED
3. FOR ETHERNET (CATEGORY 5) CABLES, REFER TO DRAWING E1.3 FOR MORE INFORMATION.
4. TWINAXIAL CABLE, FURNISHED BY WALGREENS AND INSTALLED BY LANDLORDS CONTRACTOR, BELDEN 9207, (PROVIDE 10 FEET OF SLACK AT EACH END), ROUTE FROM AS/400 TERMINSA (DRAWING D-1, #24B) TO TECH EQUIPMENT CABINET. (1 1/2" CONDUIT). STUB-UP CONDUIT TO ABOVE CEILING AT AS/400 TERMINAL AND AT TECH EQUIPMENT CABINET, (SEE DETAIL 7,E4.4).
5. ONE (1) 1" (SPARE) COMMUNICATIONS CONDUIT WITH #12 PULL STRING TO TECH EQUIPMENT CABINET.

POWER KEYED NOTES:

2. TWO (2) 20A.120V.1PH. CIRCUIT FOR OFFICE SYSTEM EQUIPMENT RECEPTACLES, CIRCUIT FROM PANEL "LP-CR". SEE DETAIL 12/E4.4.
24. 1000W OUTLET WITH SOLID CONNECTION TO 5'-0" MULTI-OUTLET RACEWAY ASSEMBLY (PLUGMOLD OR PLUGTRAK) MOUNTED 1'-3" A.F.F., UNLESS NOTED OTHERWISE.
49. ONE (1) 20A.120V.1PH. CIRCUIT FROM PANEL "LP-CR" FOR COVERT CCTV SYSTEM. SEE DRAWING E1.4 FOR ADDITIONAL INFORMATION.
73. THREE (3) 20A.120V.1PH. CIRCUITS FROM PANEL "LP-CR" FOR OFFICE COMMUNICATIONS CABINETS RECEPTACLES.

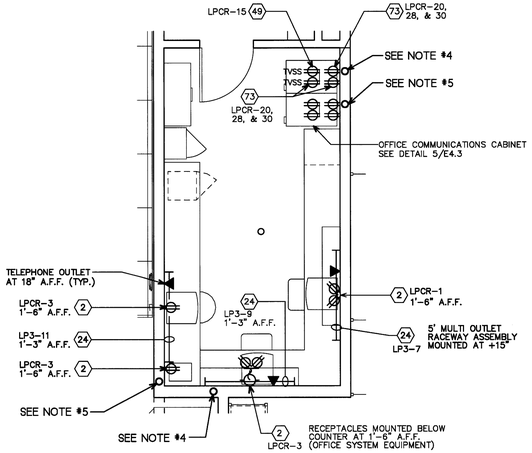


3 / E4.3

## RX COMMUNICATIONS CABINET - ELEVATION

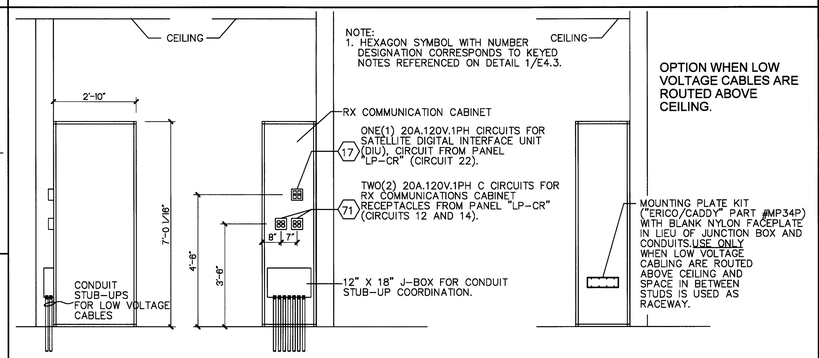


NOTE:
1. HEXAGON SYMBOL WITH NUMBER DESIGNATION CORRESPONDS TO KEYED NOTES REFERENCED ON DETAIL 1/E4.3.

SIDE VIEW 3/8" = 1'-0" | FRONT VIEW 3/8" = 1'-0" | FRONT VIEW 3/8" = 1'-0"

4 / E4.3

## OFFICE COMMUNICATION CABINET - ELEVATION

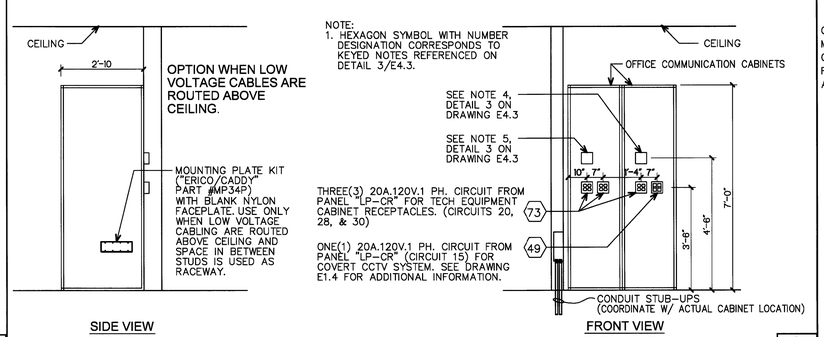


NOTE:
1. HEXAGON SYMBOL WITH NUMBER DESIGNATION CORRESPONDS TO KEYED NOTES REFERENCED ON DETAIL 3/E4.3.

SIDE VIEW 3/8" = 1'-0" | FRONT VIEW 3/8" = 1'-0"

5 / E4.3

## COSMETICS, FRONT CASH REGISTER #3 & DRIVE THRU CIRCUIT STUB-UP DETAIL

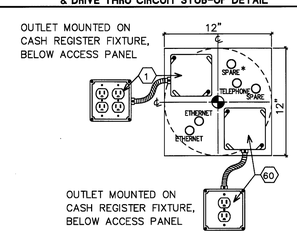


SCALE: 1 1/2" = 1'-0"

* - ONLY ONE (1) LOW VOLTAGE SPARE CONDUIT IS REQUIRED PER CASH REGISTER STAND OR ISLAND.

SERVICES:
1 - CHECKPOINT
2 - REGISTER
3 - CATALINA
4 - SPARE

6 / E4.3

## ELECTRICAL - PARTIAL ROOF PLAN

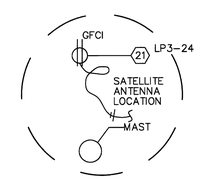


8 / E4.3

## FRONT CASH REGISTERS #1 & 2 CIRCUIT STUB-UP DETAIL

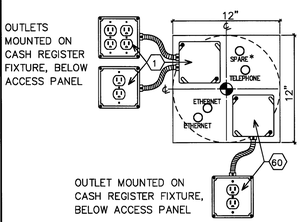


SCALE: 1 1/2" = 1'-0"

* - ONLY ONE (1) LOW VOLTAGE SPARE CONDUIT IS REQUIRED PER CASH REGISTER STAND OR ISLAND.

SERVICES:
1 - CHECKPOINT
2 - REGISTER
3 - CATALINA
4 - PRESENTATION SCANNER
5 - SPARE
6 - SPARE

7 / E4.3

## RTD MOUNTING DETAIL

NOTE:
1. APPLIES TO G.E. STORES.
2. ATTACH RTD TO THE WALL WITH BRACKET.

POWER KEYED NOTES:

14. SIGN PANEL "LP-SP".
45. RTD. SEE DRAWING E2.1C FOR ADDITIONAL INFORMATION.

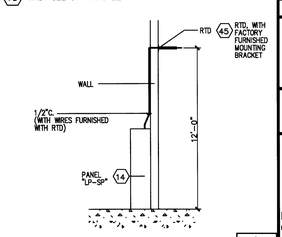


9 / E4.3

| NO. | DATE | BY | DESCRIPTION | CONST |
|---|---|---|---|---|
| | | | | |

REVISIONS

CERTIFICATION AND SEAL

I HEREBY CERTIFY THAT THIS PLAN AND SPECIFICATION WAS PREPARED BY ME OR UNDER MY DIRECT SUPERVISION AND THAT I AM A DULY REGISTERED ARCHITECT OR ENGINEER UNDER THE LAWS OF THE STATE OF MAINE AS SIGNIFIED BY MY HAND AND SEAL.

FISCAL 2007 CRITERIA - STORE #12325

WALGREENS
616 FOREST AVENUE
PORTLAND, MAINE

DRAWING TITLE
ELECTRICAL DETAILS

| CADD PLOT: | SCALE: AS NOTED | DRAWING NO. |
|---|---|---|
| VOID PLOT: | DRAWN BY: RJV | E4.3 |
| RELEASED TO CONSTRUCTION | DATE: 12-10-08 | |
| | REVIEWED BY: SAM | |