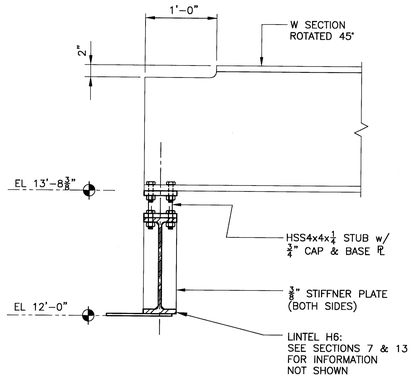

10 SECTION
S2 SCALE: 1"=1'-0"

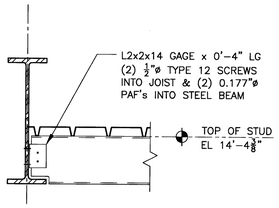

11 SECTION
S2 SCALE: 1"=1'-0"

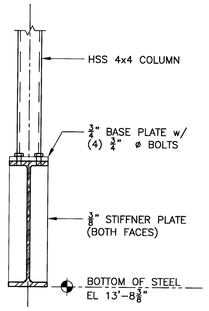

12 SECTION
S2 SCALE: 1"=1'-0"

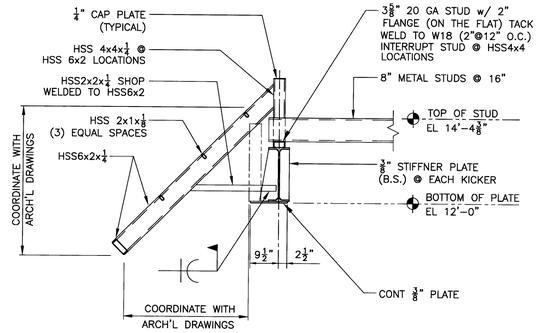

13 SECTION
S2 SCALE: 1/2"=1'-0"

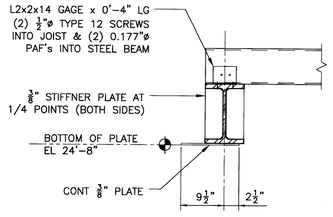

14 SECTION
S2 SCALE: 3/4"=1'-0"

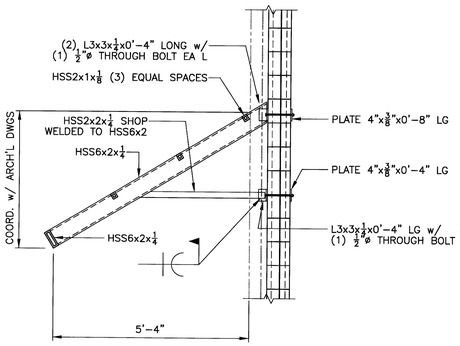

15 SECTION
S2 SCALE: 1/2"=1'-0"

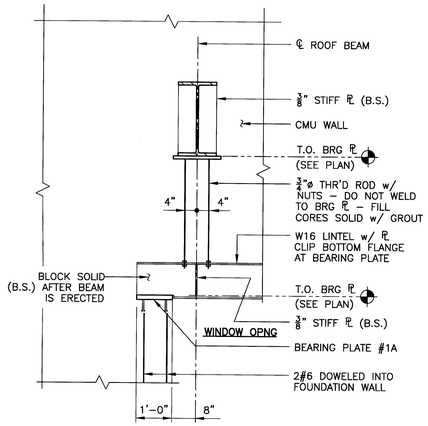

16 SECTION
S2 SCALE: 1/2"=1'-0"

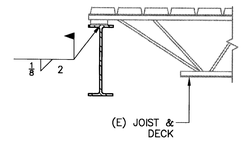

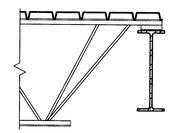

17 SECTION
S2 SCALE: 3/4"=1'-0"

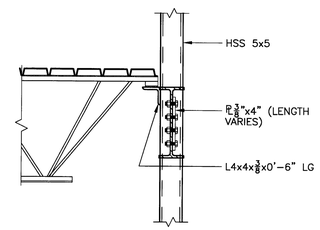

18 SECTION
S2 SCALE: 3/4"=1'-0"

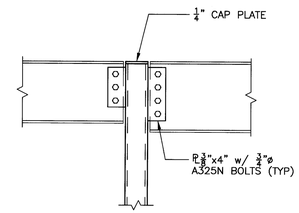

19 SECTION
S2 SCALE: 3/4"=1'-0"

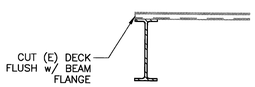

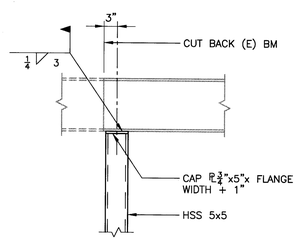

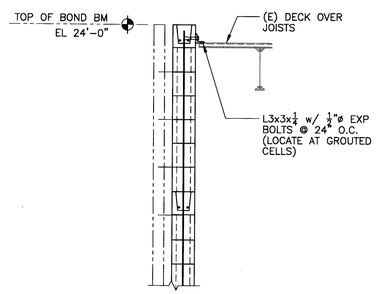

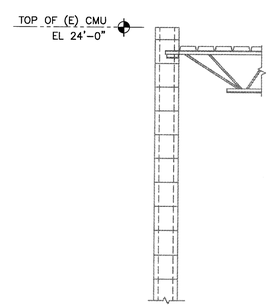

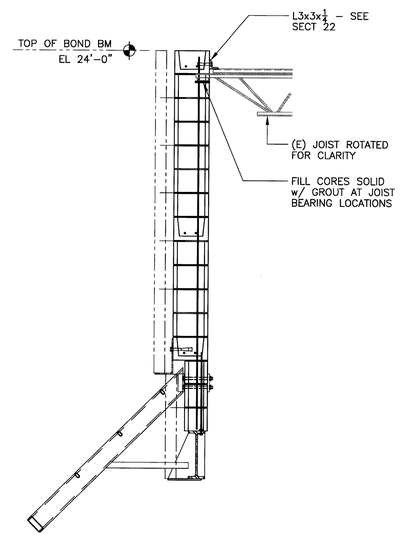

NOTE: FOR INFO NOT SHOWN SEE SECTION 7/S5

24 SECTION
S2 SCALE: 1/2"=1'-0"

20 SECTION
S2 SCALE: 3/4"=1'-0"

21 SECTION
S2 SCALE: 3/4"=1'-0"

22 SECTION
S2 SCALE: 1/2"=1'-0"

23 SECTION
S2 SCALE: 1/2"=1'-0"

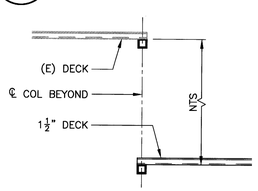

25 SECTION
S2 SCALE: 3/4"=1'-0"

MOESER & ASSOCIATES
206 AYER ROAD HARVARD, MA 978-456-6905
ARCHITECT

DRAWINGS/SPECIFICATIONS BY:
☐ WALGREENS'
■ LANDLORD'S CONSULTANT

ALL CONSTRUCTION WORK, UNLESS NOTED OTHERWISE, BY:
☐ WALGREENS' CONTRACTOR
■ LANDLORD'S CONTRACTOR (TURNKEY CONSTRCUTION)

STORE	BUILDING
NEW . . . . . ■	NEW . . . . . ■
REMODELING . . . . . ☐	EXISTING . . . . . ☐
RELOCATION . . . . . ☐	NEW SHELL ONLY . . ☐
OTHERS . . . . . ☐	

STRUCTURAL ENGINEER:
DWD ENGINEERING, INC.
5 Michael Road
E. Bridgewater, MA
TEL. 508.378.9602
FAX. 508.378.2922

NO.	DATE	BY	DESCRIPTION	CONST

REVISIONS

CERTIFICATION AND SEAL

I HEREBY CERTIFY THAT THIS PLAN AND SPECIFICATION WAS PREPARED BY ME OR UNDER MY DIRECT SUPERVISION AND THAT I AM A DULY REGISTERED ARCHITECT OR ENGINEER UNDER THE LAWS OF THE STATE OF MAINE AS SIGNIFIED BY MY HAND AND SEAL.

FISCAL 2007 CRITERIA - STORE # 12325

WALGREENS
616 FOREST AVENUE
PORTLAND, MAINE

DRAWING TITLE
SECTIONS and DETAILS

CADD PLOT:
VOID PLOT:
RELEASED TO CONSTRUCTION

SCALE: AS NOTED
DRAWN BY: RGC
DATE: 12/10/08
REVIEWED BY: DWD

DRAWING NO. **S6**

MOESER & ASSOC. JOB #08074