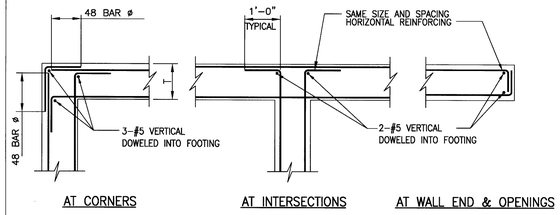

TYPICAL WALL REINFORCING DETAILS

SCALE: NTS

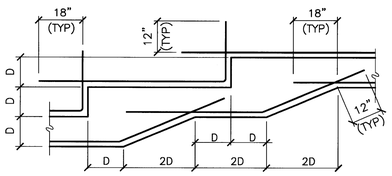

TYPICAL STEPPED FOOTING DETAIL

SCALE: NTS

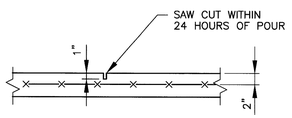

SLAB CONTROL JOINT DETAIL

SCALE: NTS

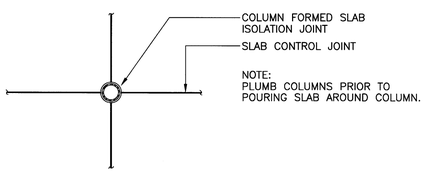

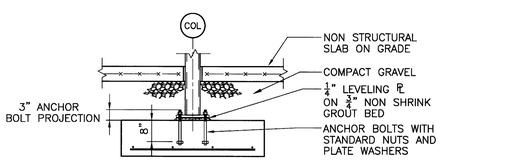

INTERIOR COLUMN FOOTING DETAIL

SCALE: NTS

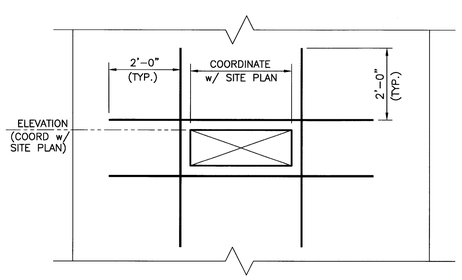

TYPICAL WALL PENETRATION DETAIL

SCALE: NTS

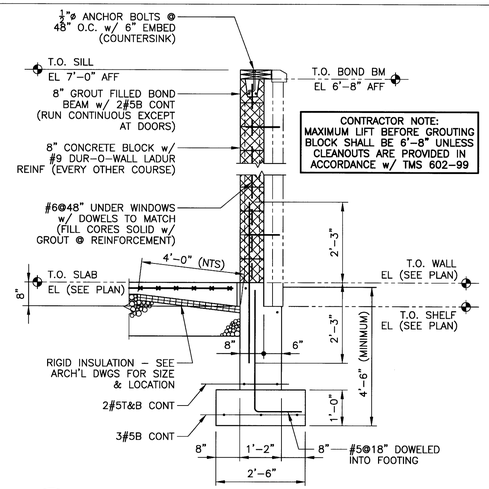

1 S1 SECTION

SCALE: 1/2"=1'-0"

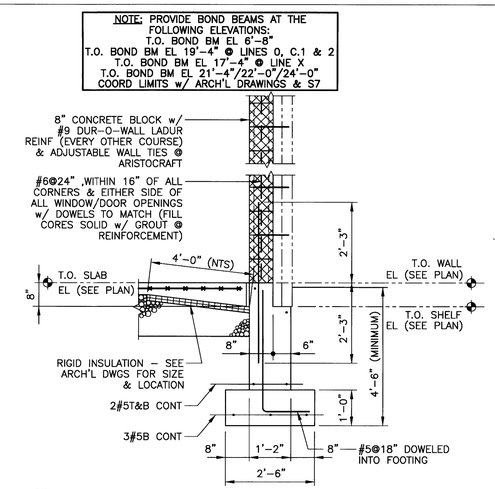

2 S1 SECTION

SCALE: 1/2"=1'-0"

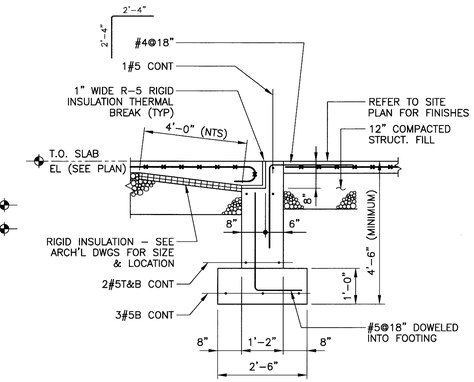

3 S1 SECTION

SCALE: 1/2"=1'-0"

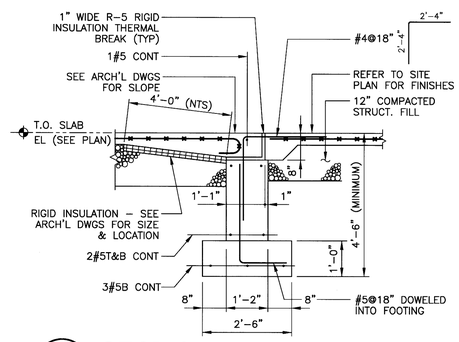

4 S1 SECTION

SCALE: 1/2"=1'-0"

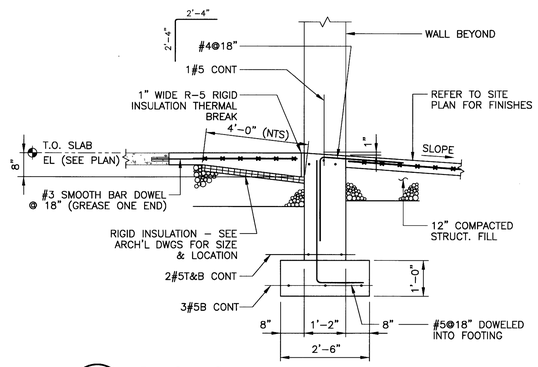

5 S1 SECTION

SCALE: 1/2"=1'-0"

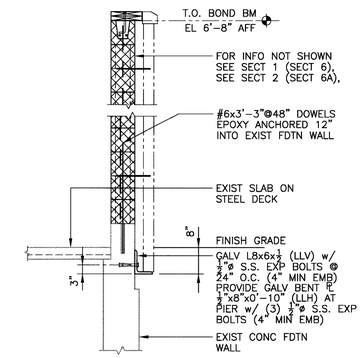

6 S1 6A S1 SECTION

SCALE: 1/2"=1'-0"

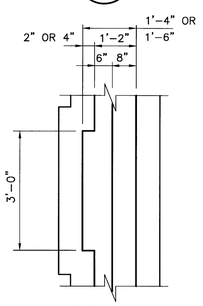

DETAIL A

SCALE: NTS

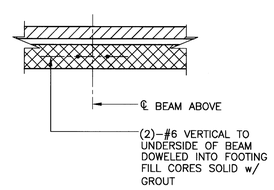

DETAIL B

SCALE: NTS

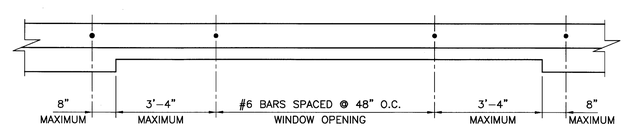

DETAIL C

SCALE: NTS

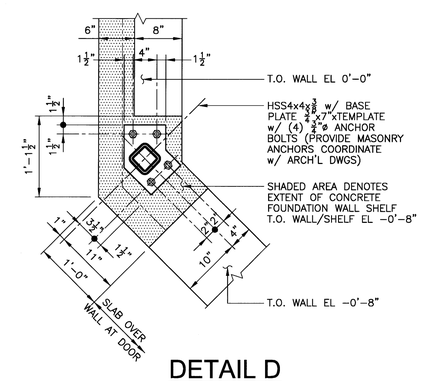

DETAIL D

SCALE: NTS

BEARING PLATE #1

PLATE 7"x3/4"x0'-8" LONG
w/ (2) 1/2"øx4"LG HEADED STUDS

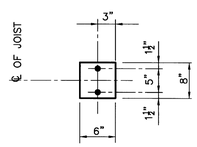

BEARING PLATE #1A

PLATE 7"x1 1/4"x1'-0" LONG
w/ (2) 1/2"øx4"LG HEADED STUDS

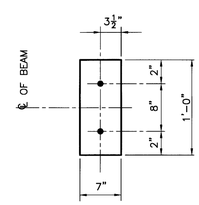

BEARING PLATE #2

PLATE 6"x3/8"x0'-8" LONG
w/ (2) 1/2"øx4"LG HEADED STUDS

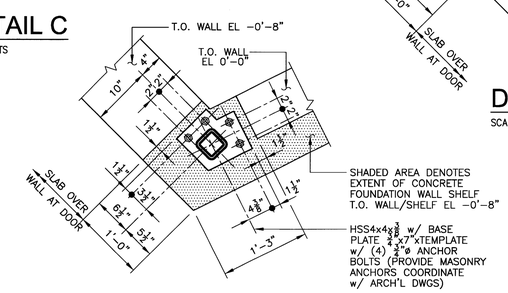

BEARING PLATE #3

PLATE 7"x1 1/4"x1'-0" LONG
w/ (2) 1/2"øx4"LG HEADED STUDS

DETAIL E

SCALE: NTS

MOESER & ASSOCIATES
206 AYER ROAD HARVARD, MA 978-456-6905
ARCHITECT

DRAWINGS/SPECIFICATIONS BY:
- ☐ WALGREENS'
- ■ LANDLORD'S CONSULTANT

ALL CONSTRUCTION WORK, UNLESS NOTED OTHERWISE, BY:
- ☐ WALGREENS' CONTRACTOR
- ■ LANDLORD'S CONTRACTOR (TURNKEY CONSTRCUTION)

STORE	BUILDING
NEW . . . . . ■	NEW . . . . . ■
REMODELING . . . . . ☐	EXISTING . . . . . ☐
RELOCATION . . . . . ☐	NEW SHELL ONLY . . ☐
OTHERS . . . . . ☐	

STRUCTURAL ENGINEER:
DWD ENGINEERING, INC.
5 Michael Road
E. Bridgewater, MA
TEL. 508.378.9602
FAX. 508.378.2922

NO.	DATE	BY	DESCRIPTION	CONST

REVISIONS

CERTIFICATION AND SEAL

I HEREBY CERTIFY THAT THIS PLAN AND SPECIFICATION WAS PREPARED BY ME OR UNDER MY DIRECT SUPERVISION AND THAT I AM A DULY REGISTERED ARCHITECT OR ENGINEER UNDER THE LAWS OF THE STATE OF MAINE AS SIGNIFIED BY MY HAND AND SEAL.

FISCAL 2007 CRITERIA - STORE # 12325

WALGREENS
616 FOREST AVENUE
PORTLAND, MAINE

DRAWING TITLE
SECTIONS and DETAILS

CADD PLOT:	SCALE: AS NOTED	DRAWING NO.
VOID PLOT:	DRAWN BY: RGC	S3
	DATE: 12/10/08	
RELEASED TO CONSTRUCTION	REVIEWED BY: DWD	