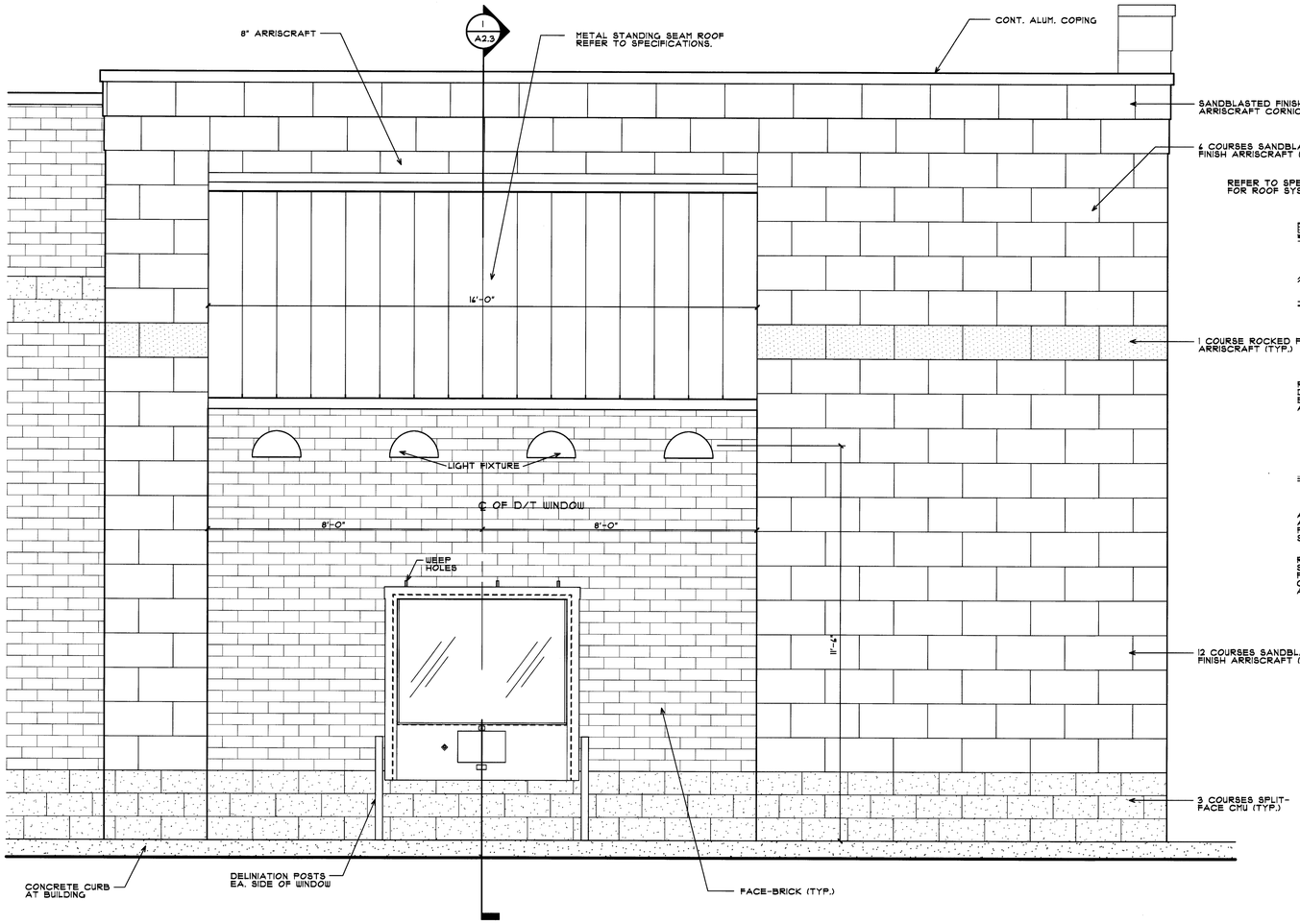

DRIVE-THRU CANOPY ELEVATION (2)

SCALE: 1/2" = 1'-0"

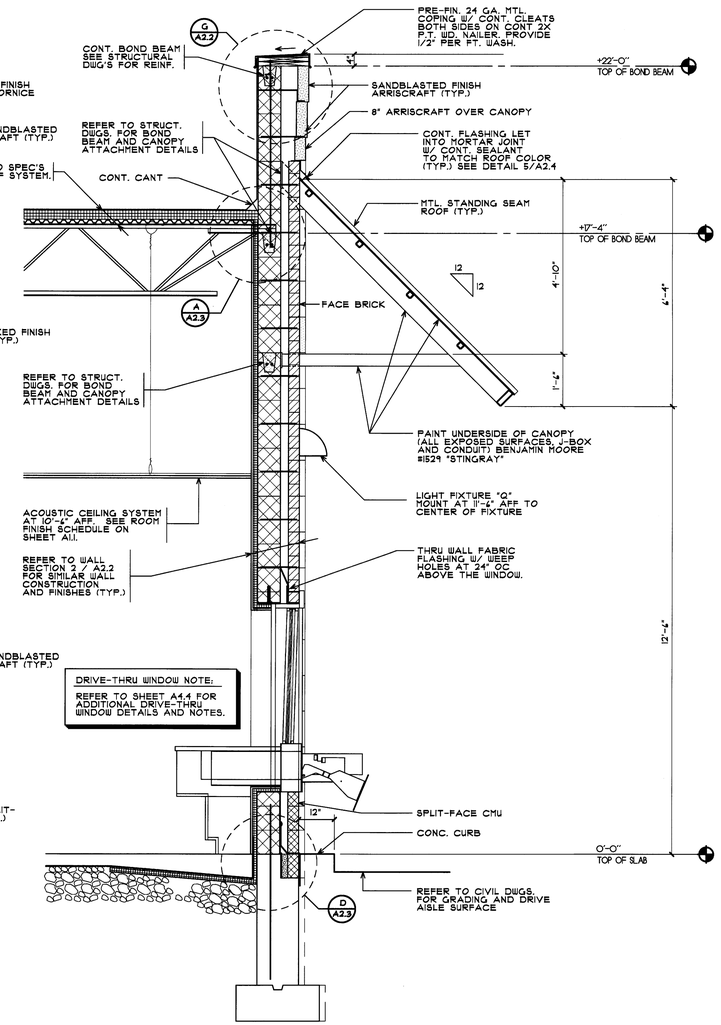

SECTION AT DRIVE-THRU (1)

SCALE: 1/2" = 1'-0"

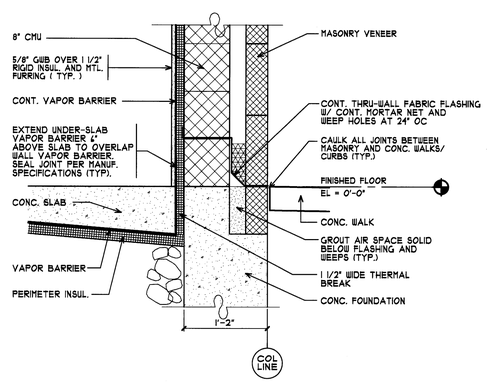

FOUNDATION DETAIL (C)

SCALE: 1"=1'-0"

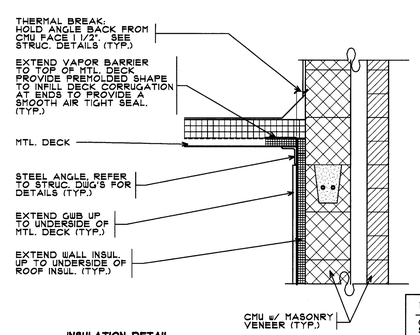

INSULATION DETAIL AT ROOF EDGE (B)

SCALE: N.T.S.

METAL DECK SEALANT NOTE:

G.C. SHALL INSTALL A BITUMINOUS SEALANT AT ALL METAL DECK SEAMS AND OPENINGS TO PROVIDE AN AIR TIGHT SEAL. (TYPICAL)

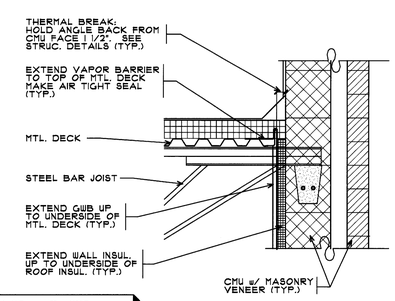

INSULATION DETAIL AT ROOF EDGE (A)

SCALE: N.T.S.

MOESER & ASSOCIATES
206 AYER ROAD HARVARD, MA 978-456-6905
ARCHITECT

DRAWINGS/SPECIFICATIONS BY:
- ☐ WALGREENS'
- ■ LANDLORD'S CONSULTANT

ALL CONSTRUCTION WORK, UNLESS NOTED OTHERWISE, BY:
- ☐ WALGREENS' CONTRACTOR
- ■ LANDLORD'S CONTRACTOR (TURNKEY CONSTRUCTION)

STORE	BUILDING
NEW . . . . . ■	NEW . . . . . ■
REMODELING . . . . . ☐	EXISTING . . . . . ☐
RELOCATION . . . . . ☐	NEW SHELL ONLY . . ☐
OTHERS . . . . . ☐	

NO.	DATE	BY	DESCRIPTION	CONST

REVISIONS

CERTIFICATION AND SEAL

I HEREBY CERTIFY THAT THIS PLAN AND SPECIFICATION WAS PREPARED BY ME OR UNDER MY DIRECT SUPERVISION AND THAT I AM A DULY REGISTERED ARCHITECT OR ENGINEER UNDER THE LAWS OF THE STATE OF MAINE AS SIGNIFIED BY MY HAND AND SEAL.

FISCAL 2007 CRITERIA - STORE #12325

WALGREENS
616 FOREST AVENUE
PORTLAND, MAINE

DRAWING TITLE
BUILDING SECTIONS AND DETAILS

CADD PLOT:	SCALE: AS NOTED	DRAWING NO.
VOID PLOT:	DRAWN BY: WAL / RJV	A2.3
RELEASED TO CONSTRUCTION	DATE: 12-10-08	
	REVIEWED BY: SAM	