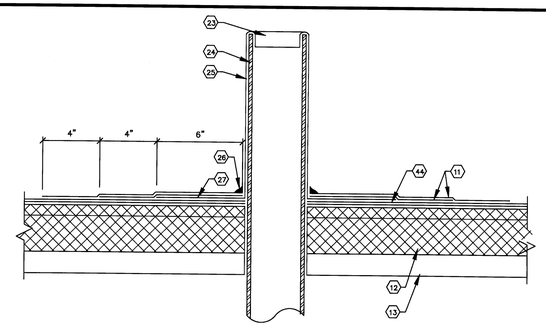

4 PLUMBING VENT
SCALE: NTS

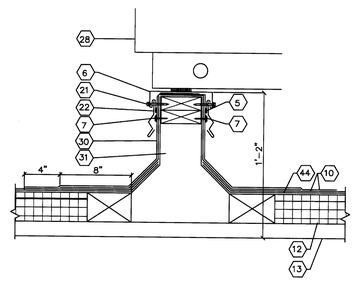

5 SECTION @ ROOF CURB
SCALE: NTS

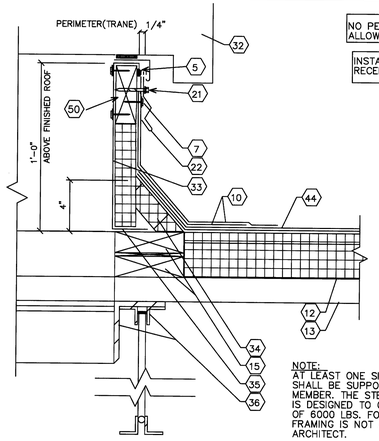

NO PENETRATION OF CURB SIDEWALL ALLOWED.

INSTALL COUNTERFLASH AND RECEIVER BEFORE SETTING UNIT

NOTE
THE ROOF CURD SHALL INCLUDE A NAILER, A AGLVIN. SHEET METAL CAP WITH SPACE BETWEEN FOR AT LEAST 3/8" THICK ROOF FLASHING MAT. THE ROOF CURBS MAY BE WITHOUT INSULATION. TOP OF WOOD CURB TO BE INSTALLED LEVEL. SHIM FROM BENEATH SO TOP OF CURB WILL BE AT LEAST 12" HIGHER THAN ALL ADAJACENT ROOF SURFACES.

NOTE:
AT LEAST ONE SIDE OF THE ROOF OPENING SHALL BE SUPPORTED BY A ROOF FRAMING MEMBER. THE STEEL ANGLE FRAMING AS SHOWN IS DESIGNED TO CARRY A MAXIMUM DEAD LOAD OF 6000 LBS. FOR HEAVIER LOADS, OR IF ROOF FRAMING IS NOT AS SHOWN, VERIFY DESIGN WITH ARCHITECT.

6 SECTION @ HVAC ROOF CURB
SCALE: NTS

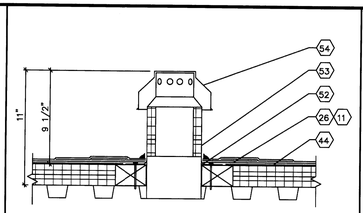

8 FLAT ROOF VENT DETAIL
SCALE: NTS

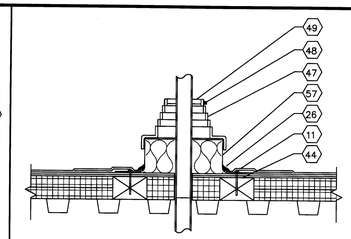

9 SINGLE PIPE PORTAL DETAIL
SCALE: NTS

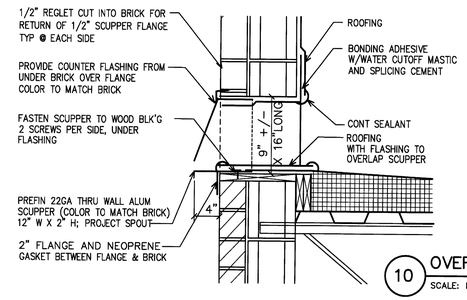

10 OVERFLOW SCUPPER DETAIL
SCALE: NTS

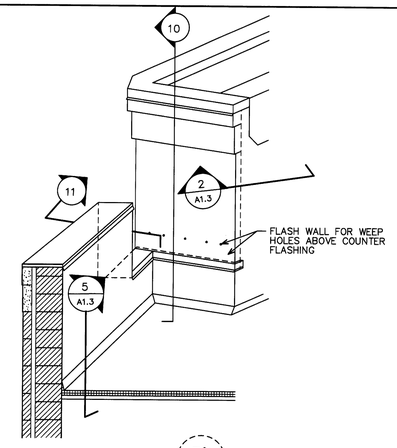

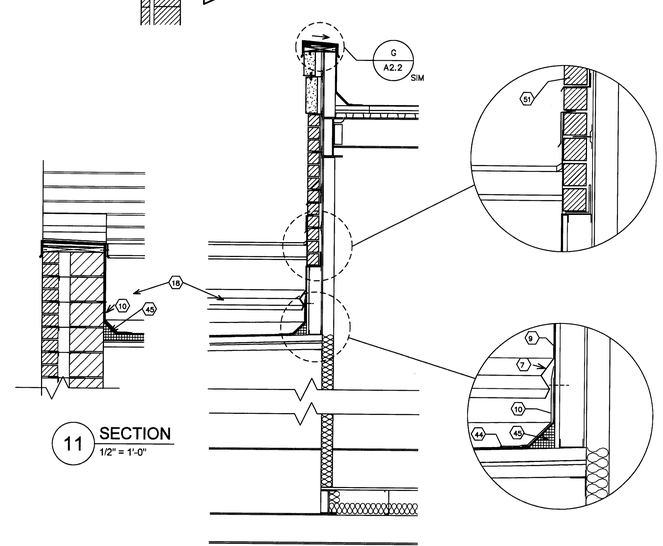

11 SECTION
1/2" = 1'-0"

10 SECTION
1/2" = 1'-0"

NOTE
REFRIGERATION LINE INSTALLER TO INSTALL FIBERGLASS FILL IN PORTAL AND TRIM INCLOS. PANEL FOR WEATHER TIGHT FIT TO REFRIG. LINES
REFRIG. LINE TRAPS AND INSUL PER MFGS. INSTRUCTIONS

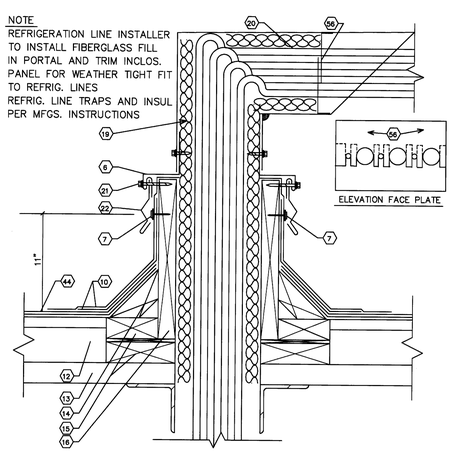

3 REFRIGERATION PIPE PENETRATION THROUGH ROOF
SCALE: NTS

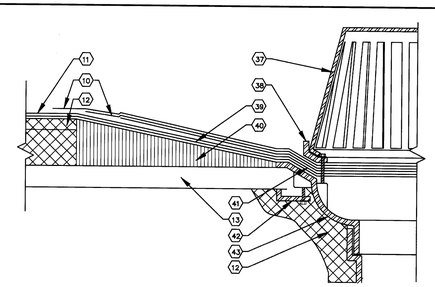

7 SECTION @ ROOF DRAIN AND OVERFLOW
SCALE: NTS

KEYED NOTES

1. ELASTOMERIC COATING ALLOWED ON CONCRETE PANEL ONLY.
2. INSTALL POLYURETHANE SEALANT AND TOOL TO FACILITATE WATER RUN-OFF.
3. EXPANDING SHANK GASKETED FASTENERS WITH WASHERS.
4. COMPRESSIBLE ELASTOMERIC TAPE TO SPAN IRREGULARITIES.
5. SEAL TOP OF FLASHING WITH A 3-COURSE OF VERTICAL GRADE ROOF CEMENT AND REINFORCEMENT FABRIC. (PRECAST PANELS ONLY)
6. SHEET METAL COUNTERFLASHING RECEIVER. SET BEFORE UNIT IS PLACED
7. FASTENERS APPROX. 8" O.C.
8. 2" WIDE HOLD-DOWN CLEAT 30" O.C.
9. PARAPET MEMBRANE, SHEATHING, AND BUILDING PAPER. BUILD OUT TO EXTERIOR WALL PLANE.
10. MULTIPLE-PLY MEMBRANE BASE FLASHING (8" MIN. HEIGHT).
11. MULTIPLE-PLY MEMBRANE STRIPPING.
12. THERMAL INSULATION.
13. ROOF DECK.
14. WOOD CANT FASTENED TO NAILERS.
15. WOOD NAILERS.
16. BEVEL CUT TOP OF WOOD CURB TO DRAIN.
17. 8" WIDE SURFACE MOUNT COUNTER FLASHING. SAW CUT IN CONCRETE PANEL AT PANEL JOINT.
18. MEMBRANE FLASHING REQUIRED ON THE BACK OF MASONRY PARAPETS FROM UNDER COPING TO OVERLAP SHEET METAL COUNTERFLASHING.
19. INSULATE VOID TO PREVENT CONDENSATION.
20. SLOPE PIPES DOWN AND AWAY FROM HOOD.
21. HIGH-DOMED, CAPPED, GASKETED FASTENERS (APPROX. 18" O.C., DEPENDING UPON WIND ZONE & LOCAL CONDITIONS; MINIMUM TWO FASTENERS PER SIDE).
22. REMOVABLE SHEET METAL COUNTERFLASHING.
23. TOP OF FLASHING CAPPED OR ROLLED INTO PIPE APPROX. 1" [25MM].
24. PLUMBING VENT STACK.
25. SOFT METAL PIPE FLASHING.
26. ROOF CEMENT OR SEALANT AT PENETRATION TO MEMBRANE JUNCTURE.
27. SET FLANGE IN ROOF CEMENT. PRIME FLANGE BEFORE STRIPPING.
28. CONDENSING UNIT. SEE ENGINEERING DRAWINGS.
29. METAL CAP FLASHING.
30. 2-PLY FELT FLASHING.
31. PREFABRICATED METAL CURB WITH WOOD (2X6) NAILERS. TOP OF RAIL TO BE LEVEL.
32. H.V.A.C. UNIT (SEE M2.1 FOR DETAIL).
33. PREFABRICATED CURB SUPPLIED BY H.V.A.C. UNIT MANUFACTURER. (TYPE MAY VARY WITH MANUFACTURER).
34. RIGID INSULATION FIBER CANT AND TWO PLY FELT FLASHING OR AS REQUIRED PER ROOFING MANUFACTURER SPECIFICATIONS.
35. SEAL EXPOSED ROOF DECK EDGES WITH GALVANIZED SHEET METAL AND SEAL ALL AROUND.
36. SEE STRUCTURAL DRAWINGS FOR STEEL SIZING.
37. DRAIN STRAINER.
38. CLAMPING RING.
39. 30" SQUARE MINIMUM, 24 LB. TO 4 LB. LEAD OR COPPER FLASHING SET ON FINISHED ROOF IN ROOF CEMENT, PRIME TOP SURFACE BEFORE STRIPPING.
40. TAPERED INSULATION.
41. MEMBRANE FIELD PLIES, METAL FLASHING AND STRIPPING PLIES ALL EXTEND UNDER CLAMPING RING.
42. DECK CLAMP.
43. DRAIN BOWL.
44. MULTIPLE-PLY MODIFIED BITUMEN ROOF MEMBRANE.
45. CANT, AS REQUIRED.
46. ABS COVER.
47. EPDM CAP, SIZE AS REQUIRED.
48. SS CLAMP.
49. ADAPTER RING AS REQUIRED.
50. 11"H PIPE PORTAL PLUS SYSTEM.
51. FLASHING AND WEAP HOLES ABOVE COUNTER-FLASHING.
52. METAL SLEEVE THROUGH DECK, BY CONTRACTOR.
53. INSULATED LINER.
54. #74004 PORTAL PLUS VENT W/INSECT SCREEN SET IN ROOFING CEMENT.
55. BACKER ROD AND SEALANT.
56. FACE PLATE
55. "ALUMI-FLASH BASE SET IN ROOF CEMENT

COPING CAP SPLICE DETAILS

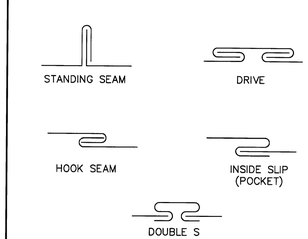

MOESER & ASSOCIATES
206 AYER ROAD HARVARD, MA 978-456-6905
ARCHITECT

DRAWINGS/SPECIFICATIONS BY:
☐ WALGREENS'
■ LANDLORD'S CONSULTANT

ALL CONSTRUCTION WORK, UNLESS NOTED OTHERWISE, BY:
☐ WALGREENS' CONTRACTOR
■ LANDLORD'S CONTRACTOR (TURNKEY CONSTRUCTION)

STORE		BUILDING	
NEW	■	NEW	■
REMODELING	☐	EXISTING	☐
RELOCATION	☐	NEW SHELL ONLY	☐
OTHERS	☐		

NO.	DATE	BY	DESCRIPTION	CONST

REVISIONS

CERTIFICATION AND SEAL

I HEREBY CERTIFY THAT THIS PLAN AND SPECIFICATION WAS PREPARED BY ME OR UNDER MY DIRECT SUPERVISION AND THAT I AM A DULY REGISTERED ARCHITECT OR ENGINEER UNDER THE LAWS OF THE STATE OF MAINE AS SIGNIFIED BY MY HAND AND SEAL.

FISCAL 2007 CRITERIA - STORE #12325

WALGREENS
616 FOREST AVENUE
PORTLAND, MAINE

DRAWING TITLE
ROOF DETAILS

CADD PLOT:
VOID PLOT:
RELEASED TO CONSTRUCTION

SCALE: AS NOTED
DRAWN BY: WAL
DATE: 12-10-08
REVIEWED BY: SAM

DRAWING NO. A1.4