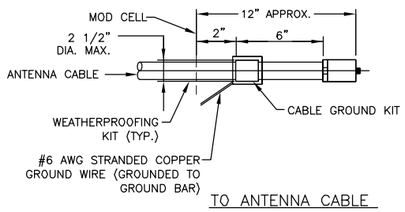

TO ANTENNA CABLE

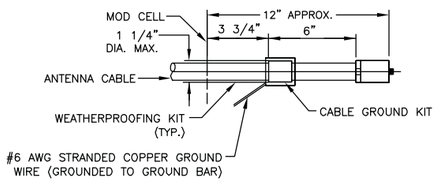

TO GPS ANTENNA CABLE

NOTE:

1. DO NOT INSTALL CABLE GROUND KIT AT A BEND AND ALWAYS DIRECT GROUND WIRE DOWN TO GROUND BAR.

CONNECTION OF CABLE GROUND KIT (1)

SCALE: N.T.S.

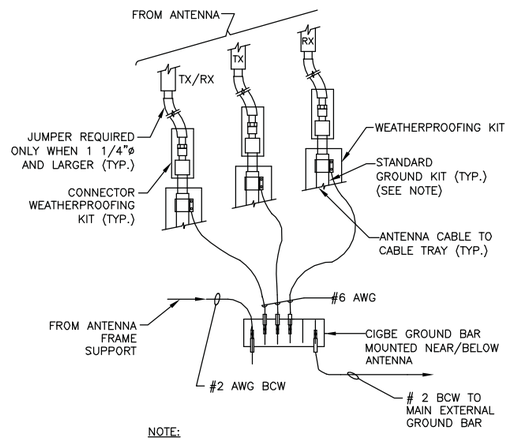

NOTE:

1. DO NOT INSTALL CABLE GROUND KIT AT A BEND AND ALWAYS DIRECT GROUND WIRE DOWN TO CIGBE.

CONNECTION OF GROUND WIRES TO GROUNDING BAR (CIGBE) (2)

SCALE: N.T.S.

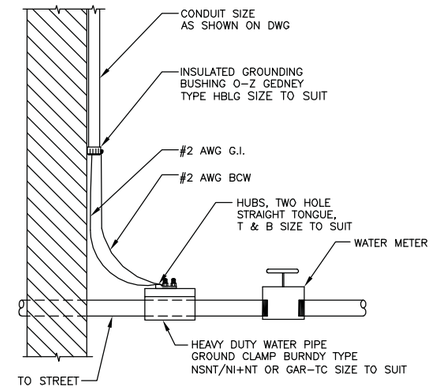

NOTE:

1. BURNDY TYPE GROUND CLAMP SHOULD BE ATTACHED ON STREET SIDE OF WATER CUT-OFF. VALVE IS INSULATED BETWEEN WATER METER & STREET GROUNDING CLAMP SHOULD BE ATTACHED TO STREET SIDE.

WATER METER GROUNDING (3)

SCALE: N.T.S.

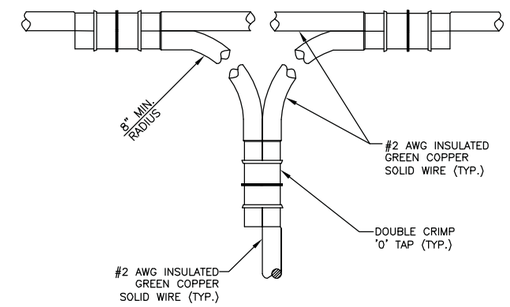

CONNECTION TO GROUND HALO DETAIL (4)

SCALE: N.T.S.

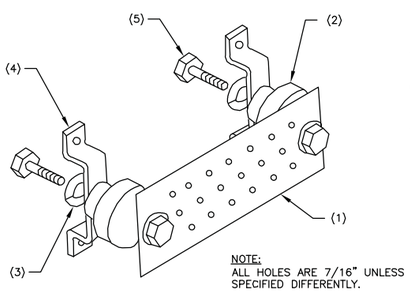

NOTE:
ALL HOLES ARE 7/16" UNLESS SPECIFIED DIFFERENTLY.

LEGEND:

1. COPPER GROUND BAR, 1/4"x4"x24". HOLE CENTERS TO MATCH NEMA DOUBLE LUG CONFIGURATION.
2. STANDOFF INSULATORS, HARGER LIGHTNING PROTECTION, INC. CAT. NO. 5263-A8.
3. 1/2" LOCKWASHERS, HARGER CO. CAT. NO. LWBS.
4. WALL MOUNTING STAINLESS STEEL, MOUNTING BRACKET, HARGER CAT NO. WBKT-1.
5. 1/2-13 x 1" HEX HEAD CAP SCREW, HARGER, CAT NO. CS88S.

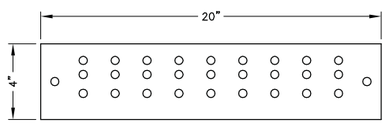

"J"

THE GROUND BAR IS 1/4" THICK, 4" WIDE, 20" LONG. IT HAS A HOLE PATTERN "J" WITH A NO. 2 AWG SOLID TINNED TAIL.

GBIT 14420 J 2-7

STYLE SIZE HOLE PATTERN TAIL

STYLE: GBIT - GROUND BAR WITH WALL MOUNTING BRACKETS, INSULATORS AND A 25' EXOTHERMICALLY WELDED TAIL.

SIZE: THICKNESS, WIDTH, LENGTH IN INCHES.

HOLE PATTERN: HOLE PATTERN CENTERS MATCH NEMA DOUBLE LUG CONFIGURATION. SEE ISOMETRIC.

TAIL: SPECIFY AMERICAN WIRE GAUGE (AWG) SIZE AND STRANDING REQUIRED. 25' LENGTH IS STANDARD UNLESS OTHERWISE REQUESTED.

GROUND BAR DETAIL (5)

SCALE: N.T.S.

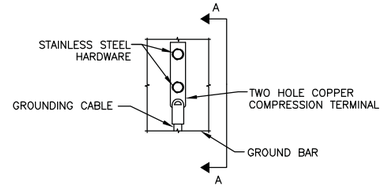

ELEVATION

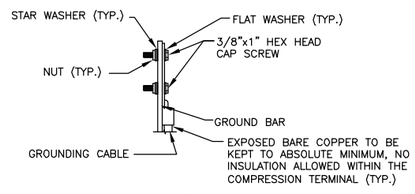

SECTION 'A-A'

NOTES:

1. DOUBLING UP OR STACKING OF CONNECTIONS IS NOT PERMITTED
2. OXIDE INHIBITING COMPOUND TO BE USED AT ALL LOCATIONS.

TYPICAL GROUND BAR MECHANICAL CONNECTION DETAIL (6)

SCALE: N.T.S.

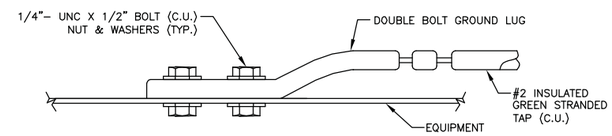

CONNECTION TO EQUIPMENT DETAIL (7)

SCALE: N.T.S.

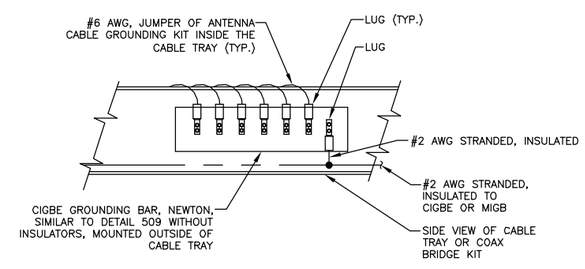

GROUND BAR MOUNTED ON CABLE TRAY (8)

SCALE: N.T.S.

Reviewed for Code Compliance
Inspections Division
Approved with Conditions

Date: 07/19/13

PORTLAND 2 ME

CONSTRUCTION DRAWINGS		
1	06/05/13	FOR SUBMITTAL
0	05/02/13	FOR SUBMITTAL
A	04/18/13	FOR COMMENT

Dewberry

Dewberry Engineers Inc.
280 SUMMER STREET
10TH FLOOR
BOSTON, MA 02210
PHONE: 617.695.3400
FAX: 617.695.3310

STATE OF MAINE
ERIC D. JOHNSON
6349
REGISTERED PROFESSIONAL ENGINEER

DRAWN BY:	MR
REVIEWED BY:	MFT
CHECKED BY:	PPB
PROJECT NUMBER:	50002925
JOB NUMBER:	50055368

SITE ADDRESS

202 WOODFORD STREET
PORTLAND, ME 04103

SHEET TITLE

GROUNDING DETAILS

SHEET NUMBER

E-4