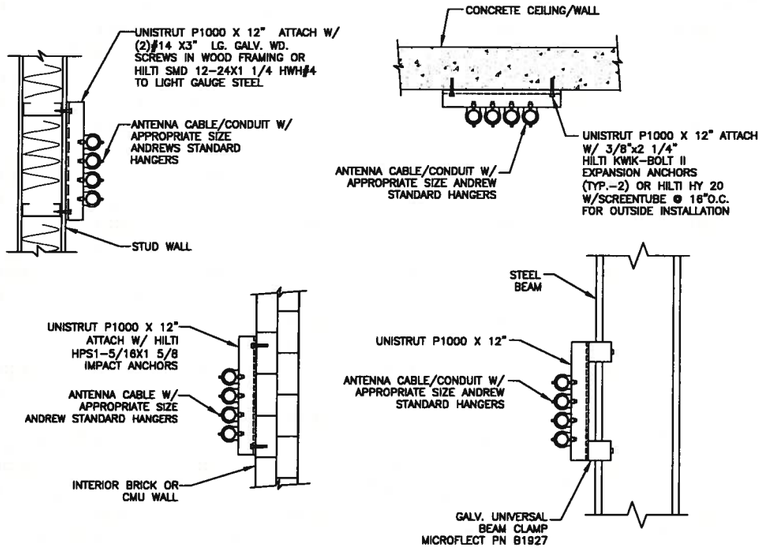

NOTES:

1. ALL COAX SUPPORT SPACING: 4'-0" MAX.
2. ALL CONDUIT SUPPORT SPACING: 10'-0" MAX.

CABLE/CONDUIT SUPPORT (1)

SCALE: N.T.S.

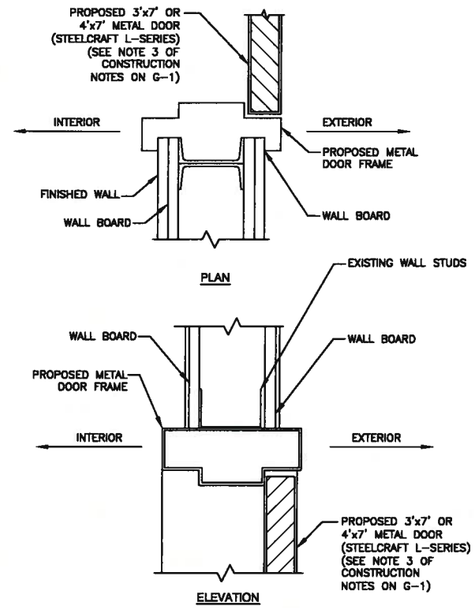

EXTERIOR DOOR JAMB (2)

SCALE: N.T.S.

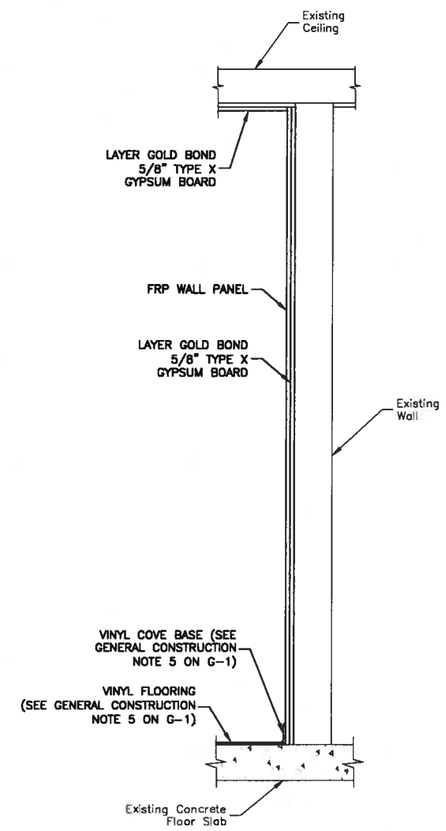

WALL SECTION

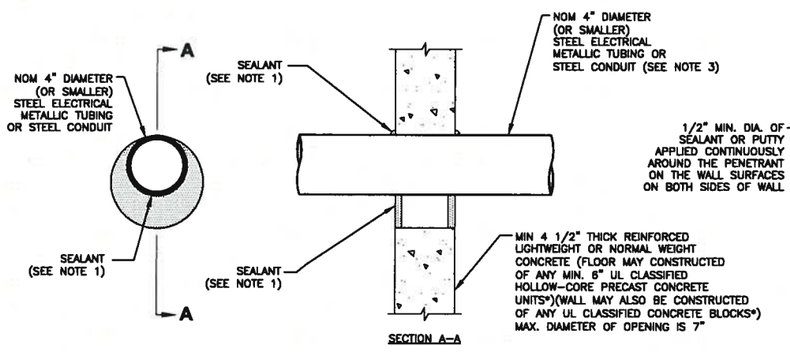

UL SYSTEM NO. C-AJ-1259
F RATING - 3 HR.
T RATING - 0 HR.

NOTES:

1. FILL, VOID OR CAVITY MATERIAL* - SEALANT - MIN. 1/2" THICKNESS OF FILL MATERIAL APPLIED WITHIN THE ANNULUS, FLUSH WITH BOTH SURFACES OF FLOOR OR WALL. AT THE POINT CONTACT LOCATION BETWEEN PENETRATING ITEM AND CONCRETE, A MIN. 1/4" THICK BEAD OF FILL MATERIAL SHALL BE APPLIED AT THE CONCRETE/ PENETRATING ITEM INTERFACE ON BOTH SIDES OF FLOOR OR WALL.
2. FORMING MATERIAL - (OPTIONAL, NOT SHOWN) - MINERAL WOOL BATT PACKING MATERIAL OR POLYURETHANE BACKER ROD FRICTION FITTED INTO OPENING AND RECESSED FROM FLOOR OR WALL SURFACES AS REQUIRED TO ACCOMMODATE THICKNESS OF FILL MATERIAL.
3. ONE CONDUIT TO BE INSTALLED EITHER CONCENTRICALLY OR ECCENTRICALLY WITHIN THE FIRESTOP SYSTEM. THE ANNULAR SPACE BETWEEN THE CONDUIT AND THE PERIPHERY OF THE OPENING SHALL BE A MIN. OF 0" (POINT OF CONTACT) TO A MAX. OF 3". CONDUIT TO BE RIGIDLY SUPPORTED ON BOTH SIDES OF FLOOR OR WALL ASSEMBLY.

* BEARING THE UL CLASSIFICATION MARK.

CORING DETAIL (3)

SCALE: N.T.S.

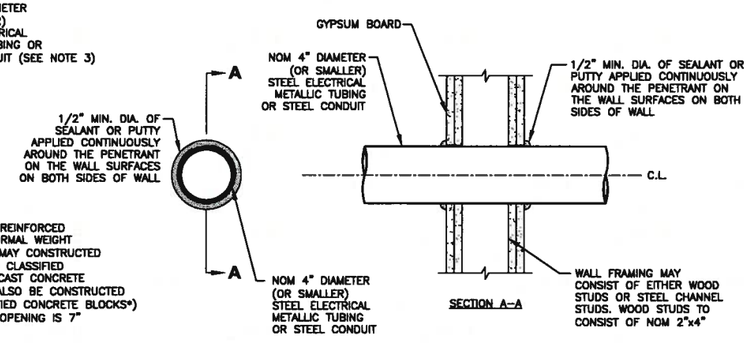

SYSTEM NO. W-L-1344
F RATINGS - 1 AND 2 HR
T RATING - 1/4 HR
L RATING AT AMBIENT - LESS THAN 1 CFM/SQ FT
L RATING AT 400 F - LESS THAN 1 CFM/SQ FT

NOTES:

1. THE 1 AND 2 HOUR FIRE RATED GYPSUM WALL BOARD/STUD WALL ASSEMBLY SHALL BE CONSTRUCTED OF THE MATERIALS & MANNER SPECIFIED IN THE INDIVIDUAL U300 OR U400 SERIES WALL & PARTITION DESIGNS IN THE UL FIRE RESISTANCE DIRECTORY.
2. 5" DIAMETER OPENING MAX.

SECTION - THROUGH PENETRATION FIRESTOP SYSTEM (4)

SCALE: N.T.S.

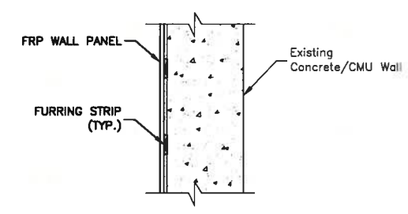

CONCRETE/CMU

NOTE:

1. SEE CONSTRUCTION NOTES ON G-1.

WALL SECTIONS (5)

SCALE: 1/2"=1' FOR 11"x17"
1"=1' FOR 22"x34"

0' 1' 2'

Reviewed for Code Compliance
Inspections Division
Approved with Conditions

Date: 07/19/13

PORTLAND 2 ME

CONSTRUCTION DRAWINGS		
1	06/05/13	FOR SUBMITTAL
0	05/02/13	FOR SUBMITTAL
A	04/18/13	FOR COMMENT

Dewberry

Dewberry Engineers Inc.
280 SUMMER STREET
10TH FLOOR
BOSTON, MA 02210
PHONE: 617.695.3400
FAX: 617.695.3310

STATE OF MAINE
PATRICK P. BARRY
12842
LICENSED PROFESSIONAL ENGINEER

DRAWN BY:	MR
REVIEWED BY:	MFT
CHECKED BY:	PPB
PROJECT NUMBER:	50002925
JOB NUMBER:	50055368

SITE ADDRESS

202 WOODFORD STREET
PORTLAND, ME 04103

SHEET TITLE

CONSTRUCTION DETAILS - II

SHEET NUMBER

A-5