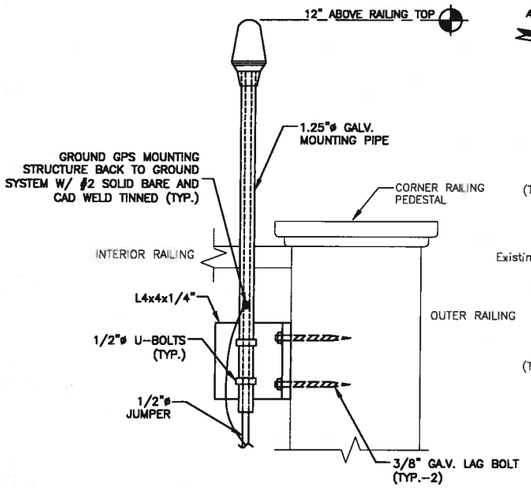

NOTE:

1. SEE ROOF PLAN FOR APPROX. ANTENNA LOCATIONS AND FIELD VERIFY WITH VERIZON WIRELESS CONST. MANAGER.

GPS ANTENNA MOUNT (1)

SCALE: N.T.S.

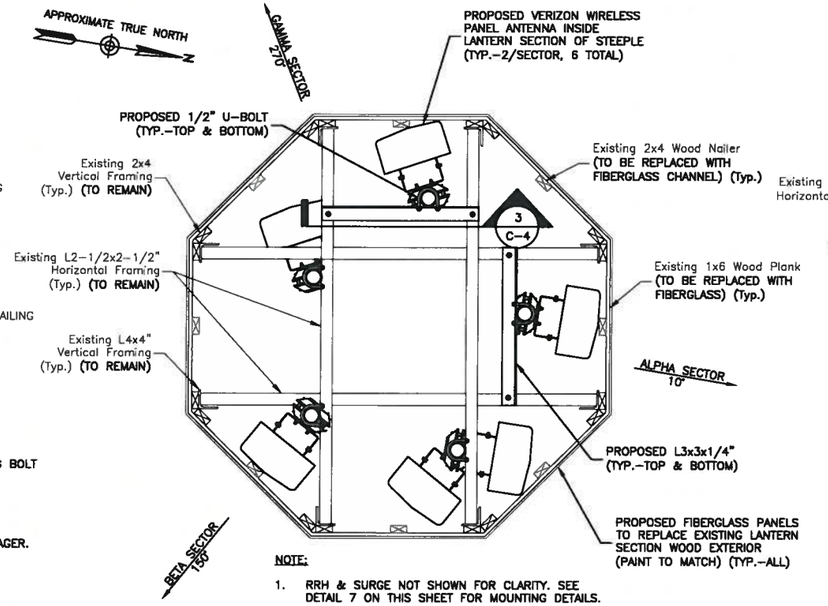

NOTE:

1. RRH & SURGE NOT SHOWN FOR CLARITY. SEE DETAIL 7 ON THIS SHEET FOR MOUNTING DETAILS.

ANTENNA MOUNTING PLAN (2)

SCALE: 3/8"=1' FOR 11"x17"
3/4"=1' FOR 22"x34"

0' 1' 2' 3'

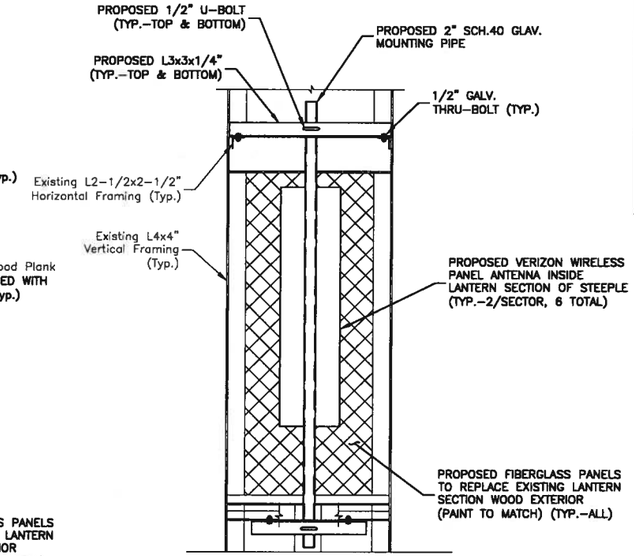

NOTE:

1. RRH & SURGE NOT SHOWN FOR CLARITY. SEE DETAIL 7 ON THIS SHEET FOR MOUNTING DETAILS.

ANTENNA MOUNTING SECTION (3)

SCALE: 3/8"=1' FOR 11"x17"
3/4"=1' FOR 22"x34"

0' 1' 2' 3'

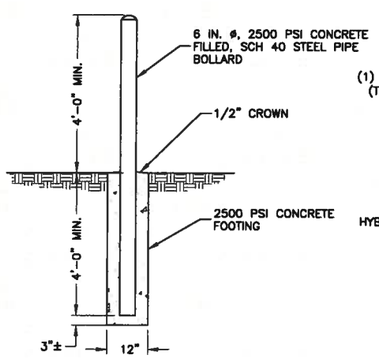

BOLLARD (4)

SCALE: N.T.S.

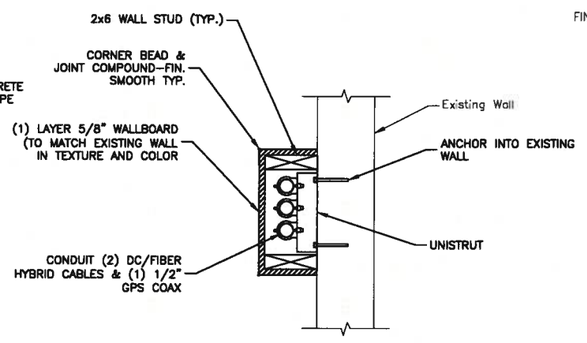

NOTES:

1. CONTRACTOR TO MINIMIZE SIZE OF CHASE AS POSSIBLE.
2. CONTRACTOR TO INSTALL PROPOSED CHASE IN EXISTING CHURCH COAT AREA. PAINT AND TEXTURE TO MATCH EXISTING WALL.

VERTICAL CHASE DETAIL (5)

SCALE: N.T.S.

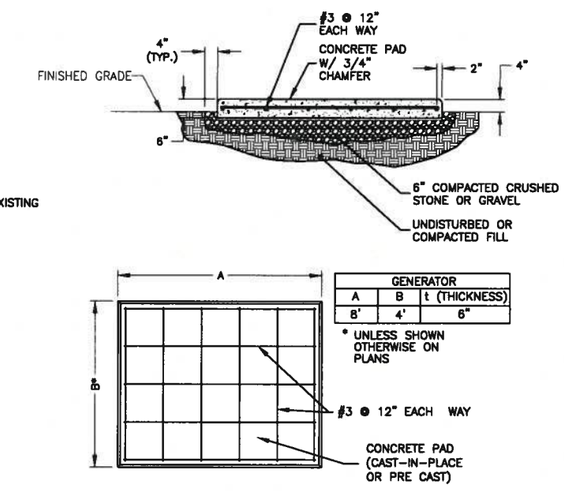

GENERATOR		
A	B	t (THICKNESS)
8'	4'	6"

* UNLESS SHOWN OTHERWISE ON PLANS

NOTES:

1. USE GALVANIZED HILTI EXPANSION ANCHORS OR, APPROVED EQUAL, FOR EQUIPMENT ANCHORAGE.
2. VERIFY THE SIZE OF THE EMERGENCY GENERATOR WITH THE SUPPLIER.
3. FOR SIZE AND LOCATION OF ANCHORS AND OTHER REQUIREMENT, SEE EQUIPMENT VENDOR DRAWINGS.

OUTDOOR PAD FOR MINOR EQUIPMENT (6)

SCALE: N.T.S.

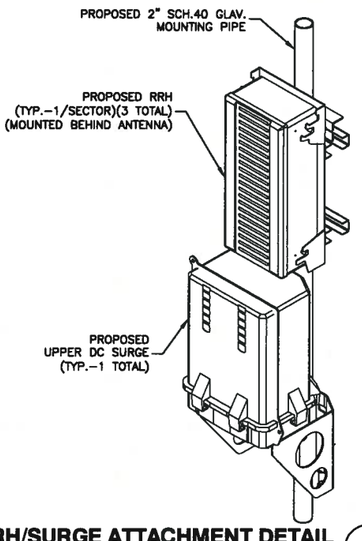

RRH/SURGE ATTACHMENT DETAIL (7)

SCALE: N.T.S

Reviewed for Code Compliance
Inspections Division
Approved with Conditions

Date: 07/19/13

PORTLAND 2 ME

CONSTRUCTION DRAWINGS		
1	06/05/13	FOR SUBMITTAL
0	05/02/13	FOR SUBMITTAL
A	04/18/13	FOR COMMENT

Dewberry

Dewberry Engineers Inc.
280 SUMMER STREET
10TH FLOOR
BOSTON, MA 02210
PHONE: 617.695.3400
FAX: 617.695.3310

STATE OF MAINE
PATRICK B. BARRY
12942
LICENSED
PROFESSIONAL ENGINEER

DRAWN BY:	MR
REVIEWED BY:	MFT
CHECKED BY:	PPB
PROJECT NUMBER:	50002925
JOB NUMBER:	50055368

SITE ADDRESS

202 WOODFORD STREET
PORTLAND, ME 04103

SHEET TITLE

CONSTRUCTION DETAILS – 1

SHEET NUMBER

A-4