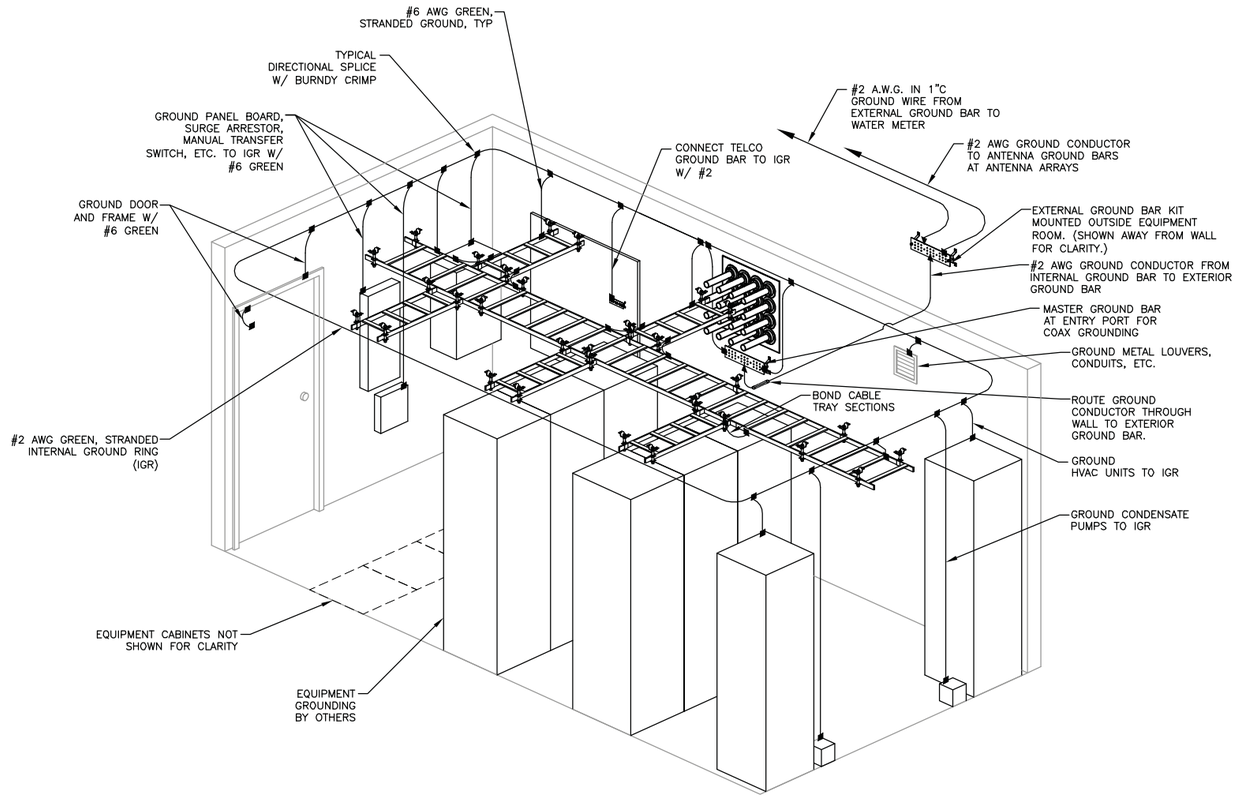

GROUNDING LEGEND	
SYMBOL	DESCRIPTION
▶	EXOTHERMIC WELD
■	MECHANICAL CONNECTION

NOTE:

1. ROOM SCHEMATIC IS NOT REPRESENTATIVE OF ACTUAL ROOM LAYOUT. FOR ACTUAL ROOM LAYOUT SEE PAGE E–1.

TYPICAL EQUIPMENT ROOM GROUNDING SCHEMATIC (1)

SCALE: N.T.S.

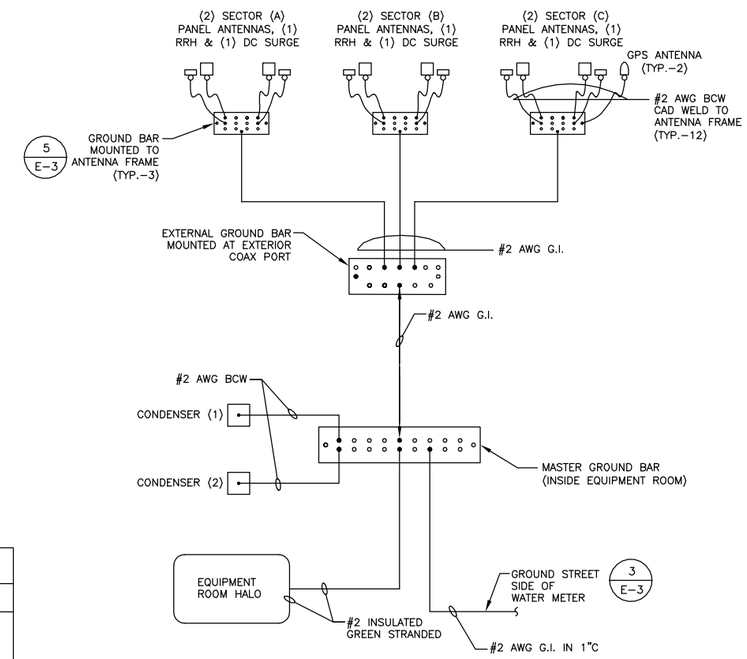

WIRE SIZE	LUG #	BOLT SIZE
#2	53207	1/4" – 20 NC x 1/2" S.S. BOLT & NUT W/LOCK WASHERS
#6	53205	

* USE WHERE EXOTHERMIC WELD IS NOT CALLED FOR.

NOTE:

1. SEE SHEET G–1 FOR GROUNDING NOTES.

GROUNDING SCHEMATIC (2)

SCALE: N.T.S.

GROUNDING NOTES:

1. GROUND SHALL COMPLY WITH NEC ART. 250.
2. GROUND CONDUCTORS SHALL BE #6 COPPER STRANDED WIRE WITH GREEN COLOR INSULATION FOR INDOOR USE.
3. ALL GROUND CONNECTIONS TO BE BURNDY HYGROUND COMPRESSION TYPE CONNECTORS OR CADWELD EXOTHERMIC WELD DO NOT ALLOW BARE COPPER WIRE TO BE IN CONTACT WITH GALVANIZED STEEL.
4. ROUTE GROUNDING CONNECTORS ALONG THE SHORTEST AND STRAIGHTEST PATH POSSIBLE, EXCEPT AS OTHERWISE INDICATED. GROUNDING LEADS SHOULD NOT BE BENT AT RIGHT ANGLE. ALWAYS MAKE 12" RADIUS BENDS. #6 WIRE CAN BE BENT AT 6" RADIUS WHEN NECESSARY.
5. CONNECTIONS TO GROUND BAR SHALL BE MADE WITH TWO HOLE COMPRESSION TYPE COPPER LUGS. APPLY OXIDE INHIBITING COMPOUND TO ALL LOCATIONS.
6. TEST COMPLETED GROUND SYSTEM AND RECORD RESISTANCE VALUES FOR PROJECT CLOSE–OUT DOCUMENTATION. GROUND RESISTANCE SHALL NOT EXCEED 5 OHMS.
7. GROUND CONDUCTORS BETWEEN MGB AND WATERMAIN SHALL BE #2/0. BONDING JUMPERS FROM METALLIC SURFACES SHALL BE #2 MINIMUM. ALL GROUND CONDUCTORS AND BONDING JUMPERS SHALL BE SOFT DRAWN ANNEALED, TINNED, BARE STRANDED COPPER WIRE. COAXIAL CABLES SHALL BE GROUNDED AT A MINIMUM OF TWO LOCATIONS USING VERIZON PROVIDED GROUNDING KITS. EXACT LOCATIONS SHALL BE FINALIZED IN THE FIELD BY THE CONSTRUCTION MANAGER.

CITY OF PORTLAND, MAINE — RESURGAM

Reviewed for Code Compliance
Inspections Division
Approved with Conditions

WES

Date: 07/19/13

PORTLAND 2 ME

CONSTRUCTION DRAWINGS		
1	06/05/13	FOR SUBMITTAL
0	05/02/13	FOR SUBMITTAL
A	04/18/13	FOR COMMENT

Dewberry

Dewberry Engineers Inc.
280 SUMMER STREET
10TH FLOOR
BOSTON, MA 02210
PHONE: 617.695.3400
FAX: 617.695.3310

STATE OF MAINE — ERIC D. JOHNSON 6349 — REGISTERED PROFESSIONAL ENGINEER

DRAWN BY:	MR
REVIEWED BY:	MFT
CHECKED BY:	PPB
PROJECT NUMBER:	50002925
JOB NUMBER:	50055368

SITE ADDRESS

202 WOODFORD STREET
PORTLAND, ME 04103

SHEET TITLE

GROUNDING SCHEMATICS

SHEET NUMBER

E–5