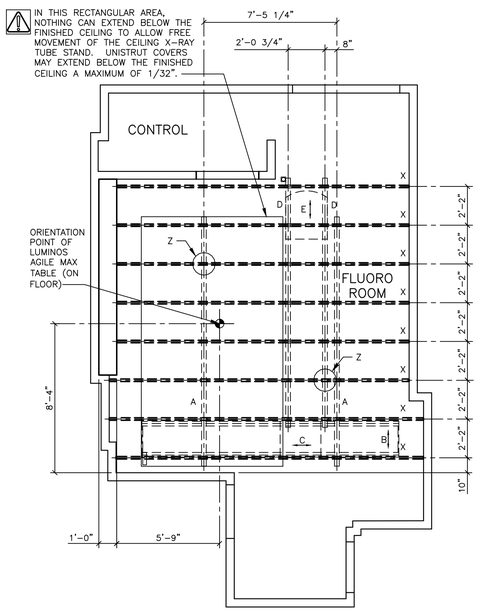

STRUCTURAL CEILING PLAN

SCALE: 1/4" = 1'-0"

CEILING PLAN LEGEND

SUPPLIED/INSTALLED BY SIEMENS

SYM	DESCRIPTION	DET
A	LONGITUDINAL RAILS ATTACHED TO "P-1001" UNISTRUT	2
B	TRANSVERSE BRIDGE MOVES ALONG LONGITUDINAL RAILS	–
C	TELESCOPE MOVES ALONG TRANSVERSE BRIDGE	–
D	MONITOR RAILS ATTACHED TO "P-1001" UNISTRUT	3
E	MONITOR CARRIAGE MOVES ALONG LONGITUDINAL RAILS	–
Z	LONGITUDINAL RAIL SUPPORT MOUNTING POINT BOLTED TO UNISTRUT FRAME	2,3

SUPPLIED/INSTALLED BY CUSTOMER/CONTRACTOR

SYM	DESCRIPTION	DET
X	"P-1001" UNISTRUT MOUNTED FLUSH WITH FINISHED CEILING. MUST BE LEVEL WITHIN ±1/8".	1

NOTE:
ALL STRUCTURAL SUPPORT DETAILS SHOWN ARE SAMPLE DETAILS BASED UPON TYPICAL AND STANDARD BUILDING PRACTICES AND ARE NOT INTENDED AS ACTUAL CONSTRUCTION DETAILS. ALL CONSTRUCTION DETAILS AND SUPPORT CALCULATIONS SHALL BE PREPARED BY A PROFESSIONAL STRUCTURAL ENGINEER AT THE CUSTOMER'S EXPENSE. IN THE EVENT AN EXISTING SUPPORT SYSTEM IS TO BE USED, IT WILL BE THE CUSTOMER'S RESPONSIBILITY TO VERIFY THE INTEGRITY OF THAT SYSTEM.

ABOVE TELESPAR ANCHORING MUST BE DESIGNED, SPECIFIED AND DETAILED BY THE STRUCTURAL ENGINEER OF RECORD.

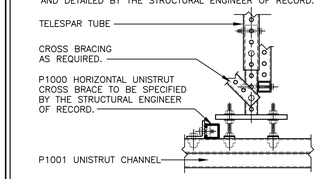

NOTE: UNISTRUT CHANNEL COVERS MUST BE SUPPLIED AND INSTALLED BY CONTRACTOR AFTER EQUIPMENT HAS BE MOUNTED TO THE CEILING.

THIS DETAIL SHOWS A UNIVERSAL TELESPAR DROP THAT IS TYPICAL OF THE STRUCTURAL SUPPORT SYSTEM USED FOR CEILING MOUNTED IMAGING EQUIPMENT. THE ACTUAL STRUCTURAL SUPPORT SYSTEM MUST BE DESIGNED, DETAILED AND SPECIFIED BY THE STRUCTURAL ENGINEER OF RECORD. UNLESS OTHERWISE SPECIFIED, THE CUSTOMER/CONTRACTOR SHALL SUPPLY AND INSTALL ALL SUPPORT MEMBERS AND NEEDED HARDWARE. IN THE EVENT AN EXISTING SUPPORT SYSTEM IS TO BE USED, IT WILL BE THE CUSTOMER'S RESPONSIBILITY TO VERIFY THE INTEGRITY OF THAT SYSTEM. SEE THE 1/4" SCALE PLAN FOR LOCATIONS AND SPACING OF P1001 UNISTRUT CHANNELS.

1	UNISTRUT DETAIL	SCALE: NONE

ROOM HEIGHT REQUIREMENTS

ROOM HEIGHT WITHOUT CEILING STAND

MINIMUM ROOM HEIGHT	RESTRICTION WITH +/-90° ROTATION
8'-2 1/2" TO LESS THAN 10'-4"	– MAXIMUM TABLETOP EXTENSION OF 11 1/2" WITH A ROOM HEIGHT OF 8'-2 1/2" – DIGITAL IMAGING TOWER CANNOT BE IN THE EXTREME HEAD-END POSITION WITH A ROOM HEIGHT OF 8'-2 1/2" – RESTRICTIONS IN THE MOVEMENT RANGE WITH AUTOMATIC CORRECTION OF MOVEMENT.
10'-4" OR GREATER	NO RESTRICTIONS

ROOM HEIGHT WITH CEILING STAND

		USABLE TABLE HEIGHT AT 45" SID (3)
MINIMUM ROOM HEIGHT	8'-9 1/8"	2'-6"
MINIMUM ROOM HEIGHT FOR 60" SID TO TABLE (3)	9'-7" (1)	3'-4"
MAXIMUM ROOM HEIGHT WITHOUT THE TUBE STAND TELESCOPE EXTENSION	9'-5 5/8" (1)	3'-2"
	9'-10 7/8" (2)	3'-7 3/8"
MAXIMUM ROOM HEIGHT WITH THE TUBE STAND TELESCOPE EXTENSION	10'-1 1/2" (1)	3'-2"
	10'-7" (2)	3'-7 3/8"

1) UPRIGHT (0') EXPOSURES ARE POSSIBLE AT LOWEST POSITION OF WALL STAND.

2) UPRIGHT (0') EXPOSURES ARE NOT POSSIBLE AT LOWEST POSITION OF WALL STAND.

3) WITH SECOND PLANE OF CEILING STAND.

UNISTRUT CHANNEL, SUPPLIED AND INSTALLED BY CUSTOMER/CONTRACTOR.

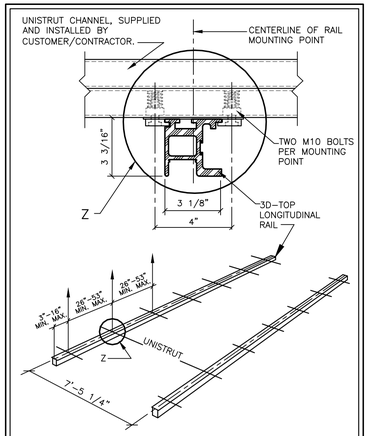

MOUNTING POINT "Z" IS TYPICAL OF ALL INTERSECTIONS OF UNISTRUT AND 3D-TOP LONGITUDINAL RAILS. THE MAXIMUM LOAD PER MOUNTING POINT "Z" IS 1,575 LBS (EXCEPT WHERE SEISMIC LOADS GOVERN). SUPPORT STRUCTURE DEFLECTION < 1/16" OVER 3 FT.

MOUNTING DETAIL FOR 4M TRANSVERSE BRIDGE

REV 0

2	CEILING RAILS	SCALE: NONE

UNISTRUT CHANNEL, SUPPLIED AND INSTALLED BY CUSTOMER/CONTRACTOR.

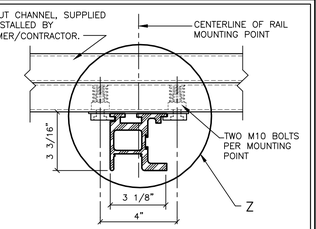

THE MAXIMUM LOAD PER MOUNTING POINT "Z" FOR DCS-1/2: 810 LBS. (EXCEPT WHERE SEISMIC LOADS GOVERN).

MOUNTING DETAIL

REV 0

3	DCS-1/2 CEILING RAIL	SCALE: NONE

MINIMUM CEILING HEIGHT W/RESTRICTION	CEILING HEIGHT WITHOUT RESTRICTION	RECOMMENDED CEILING HEIGHT
SEE RM HT REQMTS	SEE RM HT REQMTS	9'-6"

LUMINOS AGILE REV 10

SYM	DATE	DESCRIPTION
0	10/21/16	R-101 VERSION A; DATED 04/07/16 APPROVED BY CUSTOMER FOR FINALS.

-ISSUE BLOCK-

PROJECT MANAGER: RICH DEISTER
TEL: (207) 712-3205
VMAIL: EXT:
FAX: (207) 929-3776
EMAIL: RICH.DEISTER@SIEMENS.COM

SIEMENS

BRIGHTON MEDICAL CENTER
335 BRIGHTON AVE., PORTLAND, ME 04102
FLUORO ROOM – LUMINOS AGILE MAX

THE USE OR REPRODUCTION OF THIS TITLE BLOCK WITHOUT SIEMENS AUTHORIZATION WILL RESULT IN PROSECUTION UNDER FULL EXTENT OF THE LAW.
ALL RIGHTS ARE RESERVED.

PROJECT #: 1601355
SHEET 4 OF
DRAWN BY: D. CAPSTICK
SCALE: AS NOTED
REF #: 1-FFKJUW.7
DATE: 10/21/16
SHEET: S-102

ATTENTION:

- THIS DRAWING IS DESIGNED TO CONFORM TO FEATURES AND EQUIPMENT REQUIREMENTS PRESENTED AT THE TIME OF THEIR PREPARATION. SINCE BOTH THESE FACTORS ARE SUBJECT TO DESIGN MODIFICATION, THEY ARE NOT TO BE USED FOR CONSTRUCTION PURPOSES.
- THIS SET OF PLANS REPRESENTS A COMPLETE SET OF DETAILS AND SHOULD NOT BE SEPARATED.
- IT IS RECOMMENDED THAT THE SIEMENS DRAWINGS BE INCORPORATED WITH THE CONSTRUCTION DOCUMENTS FOR REFERENCE.
- ALL DIMENSIONS SHOWN ON THIS DRAWING ARE FROM FINISHED SURFACES.
- THIS DRAWING DOES NOT PROVIDE RADIATION SHIELDING REQUIREMENTS FOR X-RAY AND ASSOCIATED EQUIPMENT. THE CUSTOMER IS RESPONSIBLE FOR CONSULTING WITH A REGISTERED RADIATION PHYSICIST TO SPECIFY RADIATION PROTECTION.

Reviewed for Code Compliance
Inspection Division
Date: 02/14/17

REFERENCE DOCUMENT - NOT FOR CONSTRUCTION