ANN-80

80-Character LCD Serial Annunciator

FIRE·LITE ALARMS by Honeywell

Annunciators

General

The ANN-80 annunciator is a compact, backlit, 80-character LCD fire annunciator that mimics the Fire Alarm Control Panel (FACP) display. It provides system status indicators for AC Power, Alarm, Trouble, Supervisory, and Alarm Silenced conditions. The ANN-80 and the FACP communicate over a two-wire serial interface employing the ANN-BUS communication format. Connected devices are powered, via two additional wires, by either the host FACP or a remote UL-listed, filtered power supply. ANN-80 is red; for white, order ANN-80-W.

The ANN-80 displays English-language text of system point information including device type, zone, independent point alarm, trouble or supervisory status, as well as any custom alpha labels programmed into the control panel. It includes control switches for remote control of critical system functions. (A keyswitch prevents unauthorized operation of the control switches.)

Up to eight ANN-80s may be connected to the ANN-BUS of each FACP. No programming is required, which saves time during system commissioning.

Features

- Listed to UL Standard 864, 9th Edition.
- Backlit 80-character LCD display (20 characters x 4 lines).
- Mimics all display information from the host panel.
- Control switches for System Acknowledge, Signal Silence, Drill, and Reset.
- Control switches can be independently enabled or disabled at the FACP.
- Keyswitch enables/disables control switches and mechanically locks annunciator enclosure
- Keyswitch can be enabled or disabled at the FACP.
- Enclosure supervised for tamper.
- System status LEDs for AC Power, Alarm, Trouble, Supervisory, and Alarm Silence.
- Local sounder can be enabled or disabled at the FACP.
- ANN-80 connects to the ANN-BUS terminal on the FACP and requires minimal panel programming.
- Displays device type identifiers, individual point alarm, trouble, supervisory, zone, and custom alpha labels.
- Time-and date display field.
- Surface mount directly to wall or to single, double, or 4" square electrical box.
- Semi-flush mount to single, double, or 4" square electrical box. Use ANN-SB80KIT for angled view mounting.
- Can be remotely located up to 6,000 feet (1,800 m) from the panel.
- Backlight turns off during AC loss to conserve battery power but will turn back on if an alarm condition occurs.
- May be powered by 24 VDC from the host FACP or by remote power supply (requires 24 VDC).
- Up to eight ANN-80s can be connected on the ANN-BUS.

Controls and Indicators

- AC Power
- Alarm
- Trouble
- Supervisory
- Alarm Silenced

Specifications

- **Operating voltage range:** 18 VDC to 28 VDC.
- **Current consumption** @ 24 VDC nominal (filtered and non-resettable): 40 mA maximum.
- **Ambient temperature:** 32°F to 120°F (0°C to 49°C).
- **Relative humidity:** 93% ± 2% RH (noncondensing) at 32°C ± 2°C (90°F ± 3°F).
- 5.375” (13.65 cm.) high x 6.875” (17.46 cm.) wide x 1.375” (3.49 cm.) deep.
- For use indoors in a dry location.
- All connections are power-limited and supervised.

Agency Listings and Approvals

The listings and approvals below apply to the ANN-80. In some cases, certain modules may not be listed by certain approval agencies, or listing may be in process. Consult factory for latest listing status.

- **UL:** S2424
- **FM approved**
- **CSFM:** 7120-0075:211
- **MEA:** 442-06-E

The ANN-BUS

POWERING THE DEVICES ON THE ANN-BUS FROM AUXILIARY POWER SUPPLY

The ANN-BUS can be powered by an auxiliary power supply when the maximum number of ANN-BUS devices exceeds the ANN-BUS power requirements. See the FACP manual for more information.

ANN-BUS DEVICE ADDRESSING

Each ANN-BUS device requires a unique address (ID Number) in order to communicate with the FACP. A maximum of 8 devices can be connected to the FACP ANN-BUS communication circuit. See the FACP manual for more information.

WIRE REQUIREMENTS: COMMUNICATIONS CIRCUIT

The ANN-80 connects to the FACP ANN-BUS communications circuit. To determine the type of wire and the maximum wiring distance that can be used with FACP ANN-BUS accessory modules, it is necessary to calculate the total worst case current draw for all modules on a single 4-conductor bus. The total worst case current draw is calculated by adding the individual worst case currents for each module.

NOTE: *For total worst case current draw on a single ANN-BUS refer to appropriate FACP manual.*

After calculating the total worst case current draw, the following table specifies the maximum distance the modules can be located from the FACP on a single wire run. The table ensures 6.0 volts of line drop maximum. In general, the wire length is limited by resistance, but for heavier wire gauges, capacitance is the limiting factor.

These cases are marked in the chart with an asterisk (*). Maximum length can never be more than 6,000 feet (1,800 m), regardless of gauge used. See table below.

WIRE REQUIREMENTS: POWER CIRCUIT

- 14 to 18 AWG (0.75 - 2.08 mm^2) wire for 24 VDC power circuit is acceptable. Power wire distance limitation is set by 1.2 volt maximum line drop form source to end of circuit.
- All connections are power-limited and supervised.
- A maximum of eight ANN-80 modules may be connected to this circuit.

Communication Pair Wiring Distance: FACP to Last ANN-BUS Module

Total Worst Case Current Draw (amps)	22 Gauge	18 Gauge	16 Gauge	14 Gauge
0.100	1,852 ft.	4,688 ft.	* 6,000 ft.	*6,000 ft.
0.200	926 ft.	2,344 ft.	3,731 ft.	5,906 ft.
0.300	617 ft.	1,563 ft.	2,488 ft.	3,937 ft.
0.400	463 ft.	1,172 ft.	1,866 ft.	2,953 ft.
0.500	370 ft.	938 ft.	1,493 ft.	2,362 ft.
0.600	309 ft.	781 ft.	1,244 ft.	1,969 ft.
0.700	265 ft.	670 ft.	1,066 ft.	1,687 ft.
0.800	231 ft.	586 ft.	933 ft.	1,476 ft.
0.900	206 ft.	521 ft.	829 ft.	1,312 ft.
1.000 (max.)	185 ft.	469 ft.	746 ft.	1,181 ft.

WIRING CONFIGURATION

The following figure illustrates the wiring between the FACP and ANN-BUS devices.

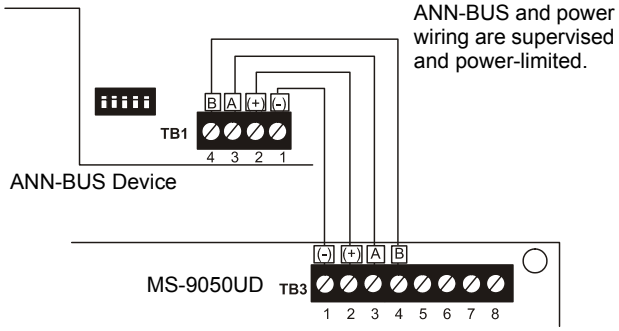

FACP Wiring to ANN-BUS Device

ORDERING OPTIONS:

ANN-80: Red 80 character LCD Annunciator.

ANN-80-W: White, 80 character LCD Annunciator.

ANN-SB80KIT-R: Red surface mount backbox with angled wedge.

ANN-SB80KIT-W: White surface mount backbox with angled wedge.

FireLite® Alarms is a registered trademark of Honeywell International Inc. ©2009 by Honeywell International Inc. All rights reserved. Unauthorized use of this document is strictly prohibited.

ISO 9001 CERTIFIED
ENGINEERING & MANUFACTURING QUALITY SYSTEMS

This document is not intended to be used for installation purposes.
We try to keep our product information up-to-date and accurate.
We cannot cover all specific applications or anticipate all requirements.
All specifications are subject to change without notice.

Made in the U.S. A.

For more information, contact Fire•Lite Alarms. Phone: (800) 627-3473, FAX: (877) 699-4105.
www.firelite.com