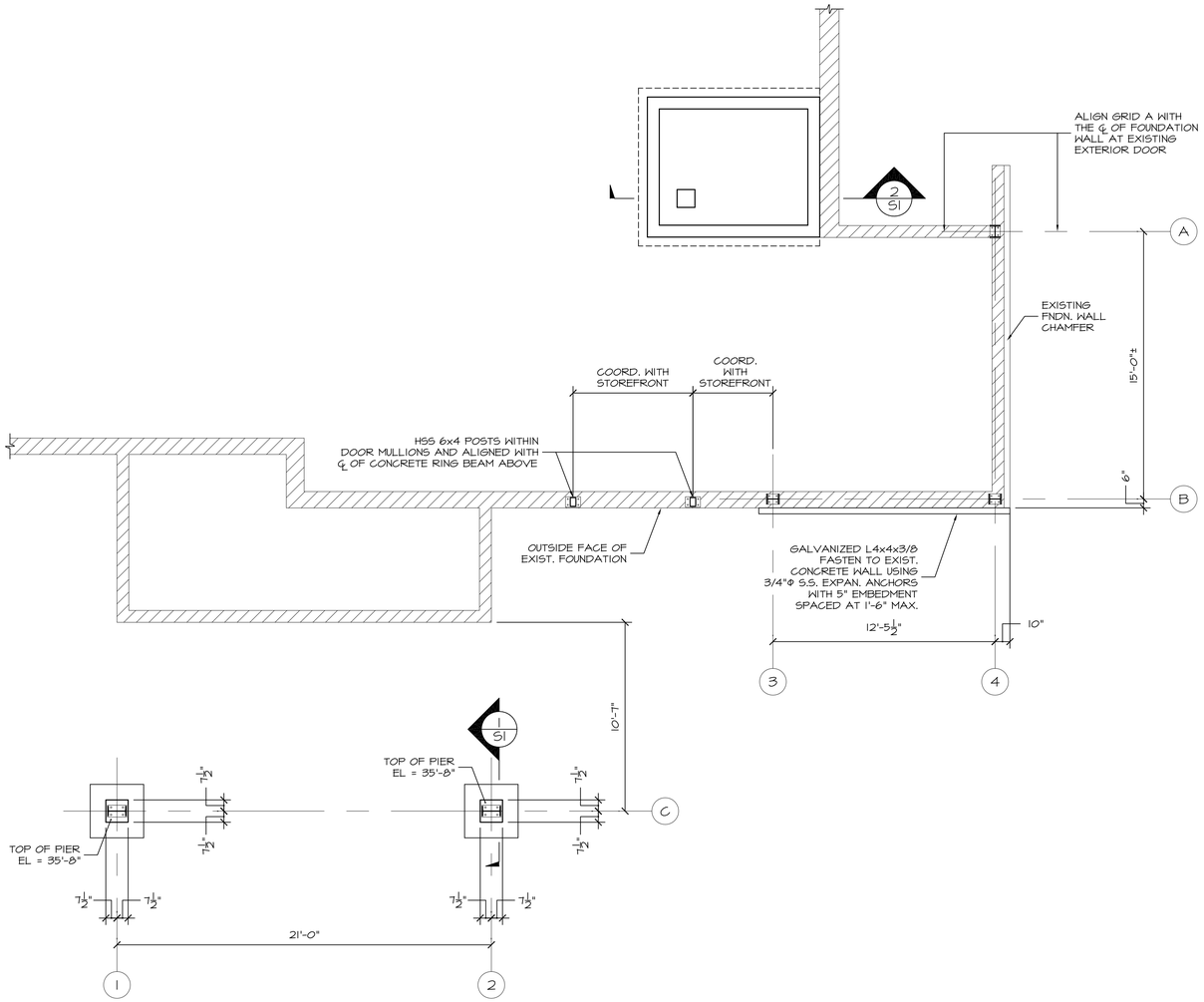

FOUNDATION PLAN
1/4"=1'-0"

SEE S3 FOR COLUMN SCHEDULE

GENERAL NOTES

ALL DIMENSIONS, ELEVATIONS AND CONDITIONS MUST BE VERIFIED IN THE FIELD BY THE GENERAL CONTRACTOR. ANY DISCREPANCY SHALL BE BROUGHT TO THE ATTENTION OF THE ENGINEER BEFORE PROCEEDING WITH THE AFFECTED PART OF THE WORK. THE CONTRACTOR SHALL DETERMINE ALL NECESSARY DIMENSIONS, ELEVATIONS AND CONDITIONS REQUIRED FOR THE FABRICATION AND ERECTION OF THE BUILDING'S COMPONENTS PRIOR TO THE SUBMISSION OF SHOP DRAWINGS. ALL SHOP DRAWINGS SHALL ACCURATELY REFLECT THE GENERAL CONTRACTOR'S VERIFICATION OF FIELD CONDITIONS.

SHOP DRAWINGS SHALL BE ORIGINAL DRAWINGS PREPARED BY THE GENERAL CONTRACTOR OR A SUBCONTRACTOR. REPRODUCTION OF ANY STRUCTURAL DRAWING FOR USE AS A SHOP DRAWING IS NOT ACCEPTABLE.

IT IS SOLELY THE GENERAL CONTRACTOR'S RESPONSIBILITY TO DETERMINE ERECTION PROCEDURES AND SEQUENCING TO ENSURE THE THE SAFETY OF THE BUILDING AND IT'S COMPONENTS DURING ERECTION. THIS INCLUDES THE ADDITION OF NECESSARY SHORING, SHEETING, TEMPORARY BRACING, GUYS AND/OR TIEDOWNS. SUCH MATERIAL SHALL REMAIN THE PROPERTY OF THE GENERAL CONTRACTOR AFTER COMPLETION OF THE BUILDING.

SECTIONS AND DETAILS SHOWN ON THE STRUCTURAL DRAWINGS SHALL BE CONSIDERED TYPICAL AND USED IN SIMILAR CONDITIONS.

THE GENERAL CONTRACTOR AND ALL SUBCONTRACTORS SHALL FOLLOW ALL APPLICABLE FEDERAL, STATE AND MUNICIPAL REGULATIONS INCLUDING THE FEDERAL DEPARTMENT OF LABOR OCCUPATIONAL SAFETY AND HEALTH ACT.

DESIGN CRITERIA

BUILDING CODE: 2003 INTERNATIONAL BUIULDING CODE

DESIGN LOADS:

LIVE LOADS	
OFFICES	50 PSF + 20 PSF PARTITIONS
STAIRS AND CORRIDORS	100 PSF + 20 PSF PARTITIONS
SNOW LOAD	
GROUND SNOW LOAD, Pg	60 PSF
SNOW EXPOSURE FACTOR, Ce	1.0
SNOW LOAD IMPORTANCE FACTOR, Is	1.0
THERMAL FACTOR, Ct	1.1
FLAT ROOF SNOW LOAD, Pf	46 PSF
WIND LOAD	
BASIC WIND SPEED (3 SEC GUST), V3s	100 MPH
BUILDING CATEGORY	I
WIND IMPORTANCE FACTOR, Iw	1.0
EXPOSURE CATEGORY	B
HEIGHT AND EXPOSURE ADJUSTMENT COEFFICIENT,	1.0

MATERIAL PROPERTIES:

CONCRETE	
28 DAY COMPRESSIVE STRENGTH	3000 PSI
CONFORM TO ACI 318-05 AND ACI 301-05	
REINFORCING	
BARS TIES AND STIRRUPS CONFORM TO ASTM A-615 GRADE 60	
STRUCTURAL STEEL	
WIDE FLANGE SHAPES	ASTM A992, GRADE 50
TUBES	ASTM A500, GRADE B
ALL OTHER STEEL SHAPES	ASTM A36
HIGH STRENGTH BOLTS BOLTS	ASTM ASTM A325
ANCHOR RODS	3/4" DIA. ASTM F1554

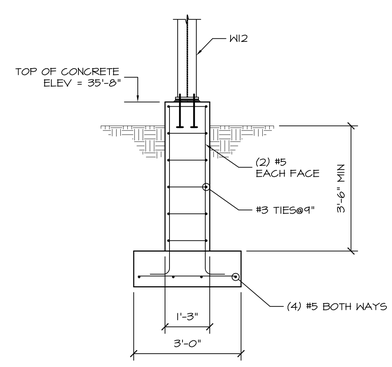

SECTION 1
1/2"=1'-0" S1

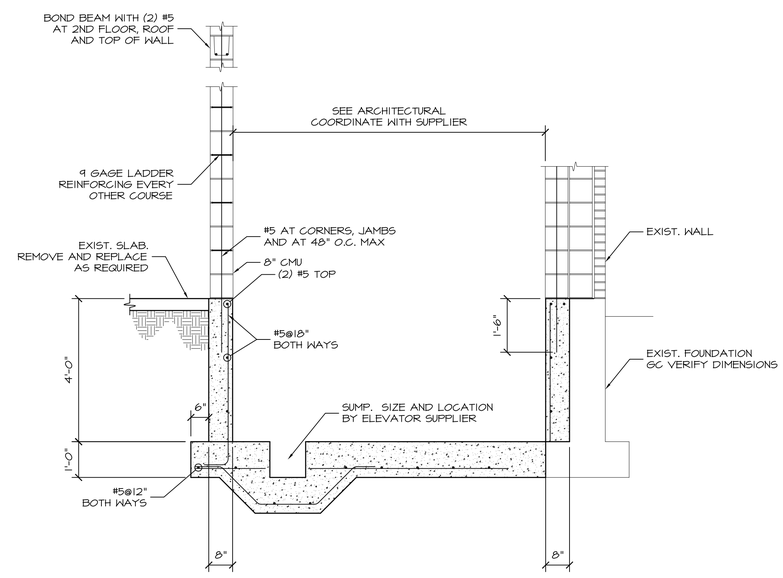

SECTION 2
1/2"=1'-0" S1

STRUCTURAL DESIGN CONSULTING
22 Oakmont Drive
Old Orchard Beach ME
04064-4121
Tel 207.934.8038
Fax 207.937.8093

STATE OF MAINE
DAVID TE REAULT
4840
PROFESSIONAL ENGINEER

Prepared for:

ARCHETYPE, P.A.
ARCHITECTS
48 Union Wharf Portland, Maine 04101
(207) 772-6022 Fax (207) 772-4056

Scale
As Noted

Date
26 APRIL 2010

FOUNDATION PLAN AND DETAILS

Project:
TOWN & COUNTRY
426 FOREST AVENUE
PORTLAND, MAINE

S1