City of Portland, Maine - Building or Use Permit Application

389 Congress Street, 04101 Tel: (207) 874-8703, Fax: (207) 874-8716

Permit No:	Issue Date:	CBL:
08-1054		116 C009001

Location of Construction:	Owner Name:	Owner Address:	Phone:
19 FESSENDEN ST	CAIAZZO STEPHEN J & LAURIE	17 BURNHAM RD	
Business Name:	**Contractor Name:**	**Contractor Address:**	**Phone**
	Steve Caiazzo Plumbing & Heating	17 Burnham Road Scarborough	2078312773
Lessee/Buyer's Name	**Phone:**	**Permit Type:**	**Zone:**
		HVAC	R-5

Past Use:	Proposed Use:	Permit Fee:	Cost of Work:	CEO District:
Multi-Family 8 Units	Multi-Family 8 Units - Install 8 BaxiLuna HT 380 units in kitchen of each unit	$420.00	$40,000.00	2

Legal use for the entire Bldg: eight (8) residential D.U. (Legal Class)

Proposed Project Description:

Install 8 BaxiLuna HT 380 units in kitchen of each unit

FIRE DEPT: ☑ Approved ☐ Denied

Signature:

INSPECTION:

Use Group: R2 Type: HVAC

IMC 2003/Gas Rules

Signature: JMB 8/27/08

PEDESTRIAN ACTIVITIES DISTRICT (P.A.D.)

Action: ☐ Approved ☐ Approved w/Conditions ☐ Denied

Signature: Date:

Permit Taken By:	Date Applied For:
ldobson	08/22/2008

1. This permit application does not preclude the Applicant(s) from meeting applicable State and Federal Rules.
2. Building permits do not include plumbing, septic or electrical work.
3. Building permits are void if work is not started within six (6) months of the date of issuance. False information may invalidate a building permit and stop all work..

Zoning Approval

Special Zone or Reviews	Zoning Appeal	Historic Preservation
☐ Shoreland	☐ Variance	☑ Not in District or Landmark
☐ Wetland	☐ Miscellaneous	☐ Does Not Require Review
☐ Flood Zone	☐ Conditional Use	☐ Requires Review
☐ Subdivision	☐ Interpretation	☐ Approved
☐ Site Plan	☐ Approved	☐ Approved w/Conditions
Maj ☐ Minor ☐ MM ☐	☐ Denied	☐ Denied
Date:	Date:	Date:

ok with conditions 8/25/08

RECEIVED AUG 27 2008 CITY OF PORTLAND

CERTIFICATION

I hereby certify that I am the owner of record of the named property, or that the proposed work is authorized by the owner of record and that I have been authorized by the owner to make this application as his authorized agent and I agree to conform to all applicable laws of this jurisdiction. In addition, if a permit for work described in the application is issued, I certify that the code official's authorized representative shall have the authority to enter all areas covered by such permit at any reasonable hour to enforce the provision of the code(s) applicable to such permit.

SIGNATURE OF APPLICANT ADDRESS DATE PHONE

RESPONSIBLE PERSON IN CHARGE OF WORK, TITLE DATE PHONE

BUILDING PERMIT INSPECTION PROCEDURES

Please call 874-8703 or 874-8693 (ONLY)
to schedule your inspections as agreed upon
Permits expire in 6 months, if the project is not started or ceases for 6 months.

The Owner or their designee is required to notify the inspections office for the following inspections and provide adequate notice. Notice must be called in 48-72 hours in advance in order to schedule an inspection:

By initializing at each inspection time, you are agreeing that you understand the inspection procedure and additional fees from a "Stop Work Order" and "Stop Work Order Release" will be incurred if the procedure is not followed as stated below.

A Pre-construction Meeting will take place upon receipt of your building permit.

__X__ Rough Plumbing/Electrical: Prior to Any Insulating or drywalling closing in.

Certificate of Occupancy is not required for certain projects. Your inspector can advise you if your project requires a Certificate of Occupancy. All projects DO require a final inspection.

If any of the inspections do not occur, the project cannot go on to the next phase, REGARDLESS OF THE NOTICE OR CIRCUMSTANCES.

CERIFICATE OF OCCUPANICES MUST BE ISSUED AND PAID FOR, BEFORE THE SPACE MAY BE OCCUPIED.

Signature of Applicant/Designee — Date 8/27/08

Signature of Inspections Official — Date 8/27/08

PERMIT ISSUED
AUG 27 2008
CITY OF PORTLAND

CBL: 116 C009001 **Building Permit #:** 08-1054

City of Portland, Maine - Building or Use Permit

389 Congress Street, 04101 Tel: (207) 874-8703, Fax: (207) 874-8716

Permit No:	Date Applied For:	CBL:
08-1054	08/22/2008	116 C009001

Location of Construction:	Owner Name:	Owner Address:	Phone:
19 FESSENDEN ST	CAIAZZO STEPHEN J & LAURIE	17 BURNHAM RD	
Business Name:	**Contractor Name:**	**Contractor Address:**	**Phone**
	Steve Caiazzo Plumbing & Heating	17 Burnham Road Scarborough	(207) 831-2773
Lessee/Buyer's Name	**Phone:**	**Permit Type:**	
		HVAC	

Proposed Use:	Proposed Project Description:
Multi-Family 8 Units - Install 8 BaxiLuna HT 380 units in kitchen of each unit	Install 8 BaxiLuna HT 380 units in kitchen of each unit

Dept: Zoning **Status:** Approved with Conditions **Reviewer:** Marge Schmuckal **Approval Date:** 08/25/2008

Note: **Ok to Issue:** ☑

1) This is NOT an approval for an additional dwelling unit. You SHALL NOT add any additional kitchen equipment including, but not limited to items such as stoves, microwaves, refrigerators, or kitchen sinks, etc. Without special approvals.
2) This property shall remain a eight (8) family dwelling building. Any change of use shall require a separate permit application for review and approval.
3) This permit is being approved on the basis of plans submitted. Any deviations shall require a separate approval before starting that work.

Dept: Building **Status:** Approved with Conditions **Reviewer:** Jeanine Bourke **Approval Date:** 08/27/2008

Note: **Ok to Issue:** ☑

1) Equipment must be installed in compliance with the manufacturer's specifications
2) All penetratios through rated assemblies must be protected by an approved firestop system installed in accordance with ASTM 814 or UL 1479, per IBC 2003 Section 712.
3) The installation must comply with the State of Maine Gas Regulations.
4) Installation shall comply with 2003 International Mechanical Code

Dept: Fire **Status:** Approved **Reviewer:** Capt Greg Cass **Approval Date:** 08/26/2008

Note: **Ok to Issue:** ☑

Comments:

8/25/2008-mes: the entire building is 8 residential dwelling units per the 1955 City Directory

8/27/2008-jmb: Steve C. Came in to provide more details on installation, including indirect plumbing for condensate and blow off for each unit.

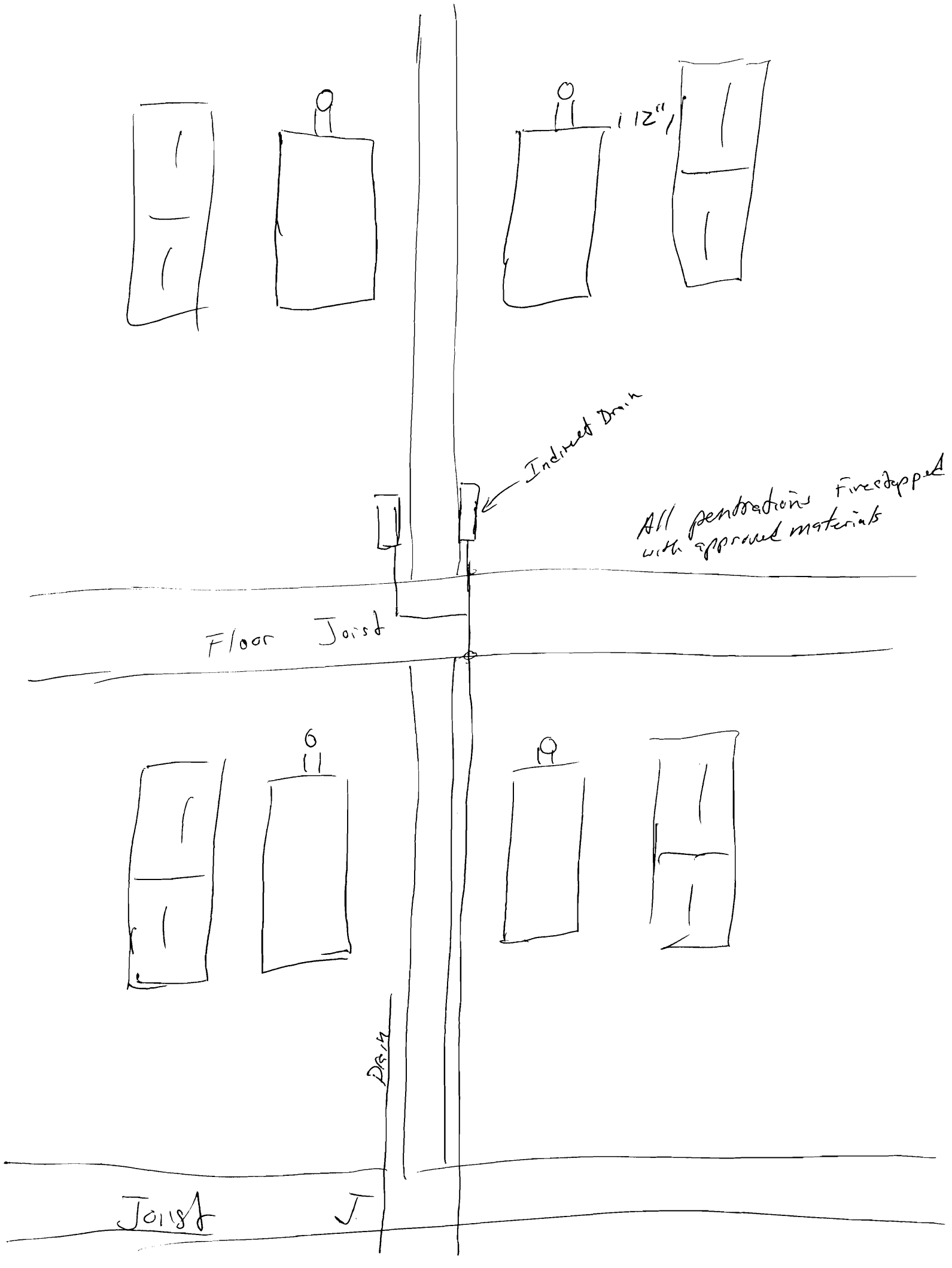
12"
Indirect Drain
All penetrations Firestopped
with approved materials
Floor Joist
6
19
Drain
Joist

Boxing In exposed piping

4 units each flor

2 Floors

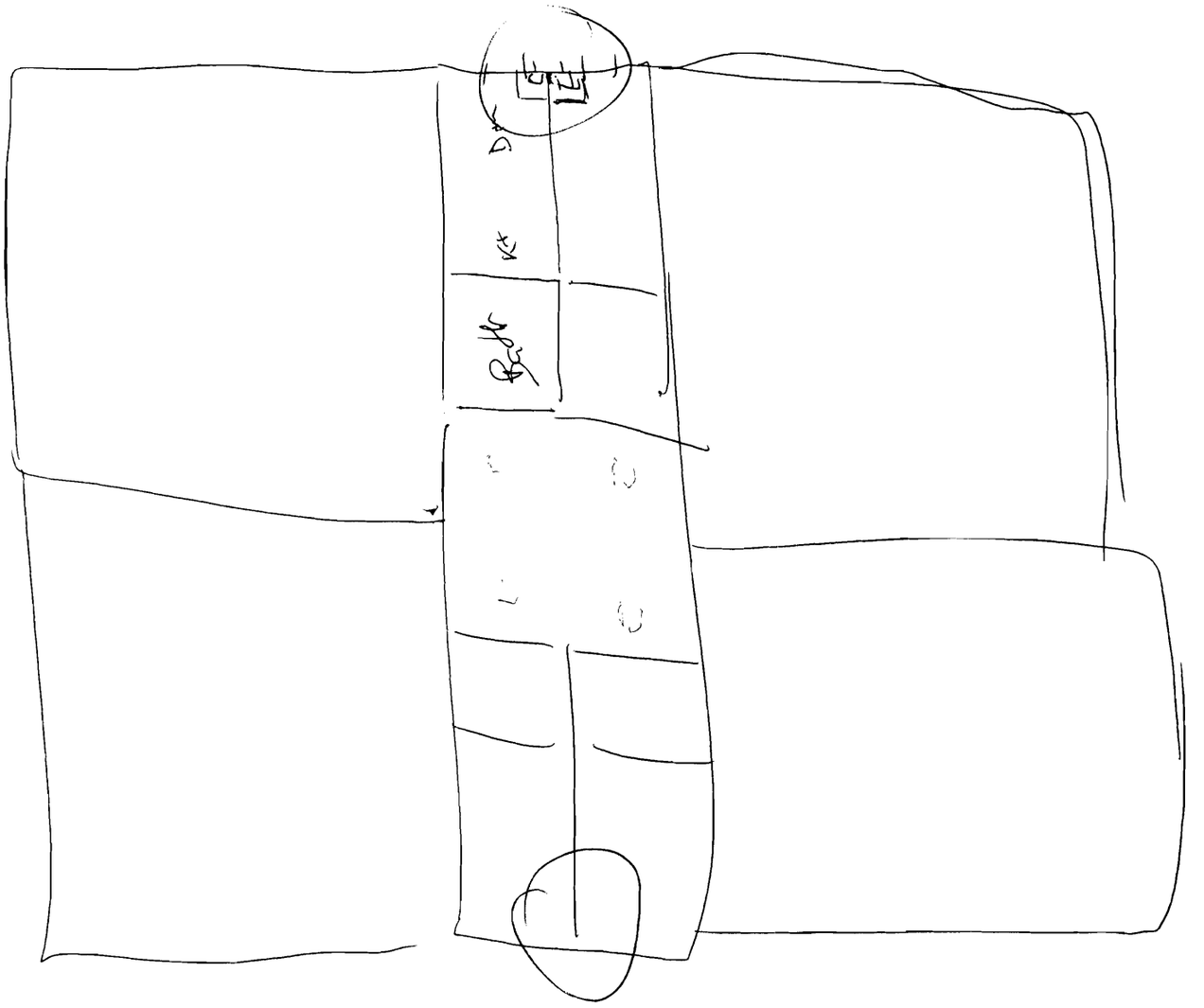

FILL IN AND SIGN WITH INK

APPLICATION FOR PERMIT
HEATING OR POWER EQUIPMENT

PERMIT ISSUED
AUG 27 2008
CITY OF PORTLAND

To the INSPECTOR OF BUILDINGS, PORTLAND, ME.

The undersigned hereby applies for a permit to install the following heating, cooking or power equipment in accordance with the Laws of Maine, the Building Code of the City of Portland, and the following specifications:

Location / CBL 19 Fessenden Street Use of Building 8 Apartments Date 8/22/08

Name and address of owner of appliance Stephen J Caiazzo

Installer's name and address Steve Caiazzo Plumbing Inc
17 Burnham Rd Scarborough ME 04074 Telephone (207) 831 2773

Location of appliance:
- ☐ Basement
- ☒ Floor
- ☒ Kitchen
- ☐ Attic
- ☐ Roof

Type of Fuel:
- ☒ Gas
- ☐ Oil
- ☐ Solid

Appliance Name: Baxi Luna HT 380

U.L. Approved ☐ Yes ☐ No

Will appliance be installed in accordance with the manufacture's installation instructions? ☒ Yes ☐ No

IF NO Explain:

The Type of License of Installer:
- ☒ Master Plumber # 7844
- ☐ Solid Fuel #
- ☐ Oil #
- ☒ Gas # PNT 1435
- ☐ Other

Type of Chimney:
- ☐ Masonry Lined
  Factory built
- ☐ Metal
  Factory Built U.L. Listing #
- ☒ Direct Vent
  Type Baxi UL#

Type of Fuel Tank N/A
- ☐ Oil
- ☐ Gas

Size of Tank

Number of Tanks

Distance from Tank to Center of Flame _____ **feet.**

Cost of Work: $ 40,000 00/00

Permit Fee: $ 420

Approved

Fire:

Ele.:

Bldg.:

Approved with Conditions

☐ See attached letter or requirement

Inspector's Signature Date Approved

Signature of Installer S Caiazzo

White - Inspection Yellow - File Pink - Applicant's Gold - Assessor's Copy

4.6 FLUE TERMINAL LOCATION - Fig. 16 IN COMPLIANCE WITH CGA B149

4.6 PLACEMENT DU TERMINAL DE LA BUSE - Fig. 16 EN CONFORMITE AVEC CGA B149

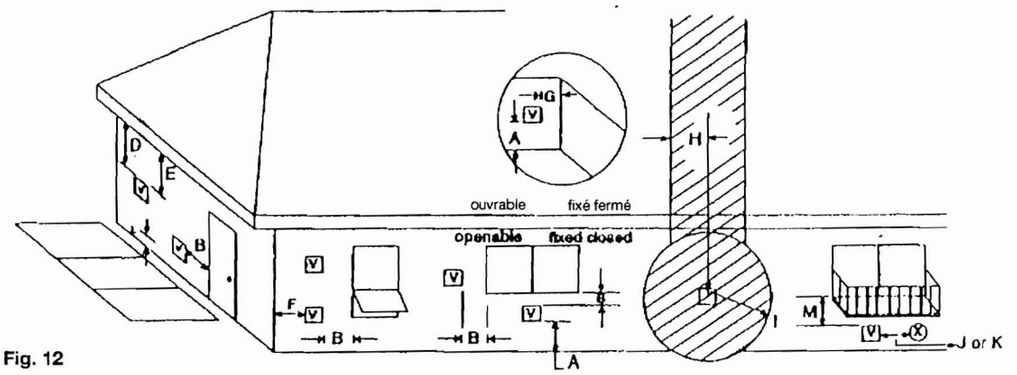

Fig. 12

V = VENT TERMINAL
= *TERMINAL CONDUIT AIR*

X = AIR SUPPLY INLET
= *PRISE D'AIR*

= AREA WHERE TERMINAL IS NOT PERMITTED
= *ZONE INTERDITE AU DEPLACEMENT DU TERMINAL*

Vent Termination Minimum Clearances - *Distances minimales du terminal*	
A = 12"	clearances above grade, veranda, porch, deck or balcony - *distances au-dessus du terrain, d'une véranda, d'un porche, du sol ou d'un balcon*
B = 12"	clearances to window or door that may be opened - *distances d'une fenêtre ou d'une porte ouvrables*
D = 18"	vertical clearance to ventilated soffit located above the terminal within a horizontal distance of 2 feet (60 cm) from the centre line of the terminal - *distance verticale d'un intrados placé au-dessus du terminal à la distance horizontale de 2 ft. (60 cm) au maximum de la ligne centrale du terminal*
E = 18"	clearance to unventilated soffit - *distance d'un intrados non ventilé*
F = 9"	clearance to outside corner - *distance d'un angle externe*
G = 6"	clearance to inside corner - *distance d'un angle interne*
H = 4 ft. (U.S.A.) 3 ft. (Canada)	not to be installed above a gas meter/regulator assembly within H horizontally from the centre line of the regulator - *à ne pas installer au-dessus d'un compteur du gaz / du raccord d'un limiteur placés à 3 ft. (90 cm) calculés en horizontal de la ligne centrale du limiteur*
I = 3 ft. (U.S.A.) 6 ft. (Canada)	clearance to service regulator vent outlet - *distance de la sortie du conduit d'un limiteur de service*
J = 9" (U.S.A.) 12" (Canada)	clearance to non-mechanical air supply inlet to building or the combustion air inlet to any other appliance - *distance d'une prise d'air non-méchanique de l'édifice ou d'une prise d'air de combustion pour d'autres appareils*
K = 3 ft. (U.S.A.) 6 ft. (Canada)	clearance to a mechanical air supply inlet - *distance d'une prise d'air méchanique*
* L = 7 ft.	clearance above paved side-walk or a paved driveway located on public property - *distance d'un trottoir pavé ou d'une allée d'accès pavée placés sur le sol publique*
** M = 18"	clearance under veranda, porch, deck or balcony - *distance au-dessous d'une véranda, d'un porche, du sol ou d'un balcon*

* a vent shall not terminate directly above a side-walk or paved driveway which is located between two single family dwellings and serves both dwellings unless terminated 7ft above sidewalk.

** only permitted if veranda, porch, deck or balcony is fully open on a minimum of 2 sides beneath the floor.

* *si un soupirail ne s'arrête pas à 7 pieds au-dessus du trottoir, il ne peut pas se terminer sur un trottoir ou sur une voie d'accès privée avec revêtement située entre deux habitations résidentielles individuelles et utilisée par les deux habitations.*

** *permis exclusivement si la véranda, le porche, le sol ou le balcon sont complètement ouverts sur au moins deux côtés au-dessus du pavement.*

Note: local Codes or Regulations may require different clearances.
The flue terminal must be exposed to the external air and the position must allow the free passage of air across it at all times. In certain weather conditions the terminal may emit a plume of steam. Avoid positioning the terminal where this may cause a nuisance.
If the terminal is fitted less than 6.56 ft / 2 m above a surface to which people have access, the terminal must be protected by a terminal guard.

***Remarquez**: les Codes et les Règlements locaux pourraient entraîner*
Le terminal de la buse des fumées doit être placé au grand air de façon que sa position permette le déplacement de l'air à tout moment.
Dans certaines conditions météo le terminal peut dégager du vapeur. Evitez de placer le terminal où cela pourrait déranger.
Si le terminal est installé à moins de 6.56 ft / 2 m au dessus d'un endroit accessible aux gens, il est nécessaire d'ajouter une protection

BAXI

LUNA HT 380

Condensing gas fired wall mounted combination boiler
Chaudière murale à gaz à condensation à deux services

WARNING: If the information in these instructions is not followed exactly, a fire or explosion may result causing property damage, personal injury or death.

— Do not store or use gasoline or other flammable vapors and liquids in the vicinity of this or any other appliance.

— WHAT TO DO IF YOU SMELL GAS

- Do not try to light any appliance.
- Do not touch any electrical switch; do not use any phone in your building.
- Immediately call your gas supplier from a neighbor's phone. Follow the gas supplier's instructions.
- If you cannot reach your gas supplier, call the fire department.

— Installation and service must be performed by a qualified installer, service agency or the gas supplier.

AVERTISSEMENT: *Assurez-vous de bien suivre les instructions dennées dans cette notice pour réduire au minimum le risque d'incendie ou d'explosion ou pour éviter tout dommage matériel, toute blessure ou la mort.*

— *Ne pas entreposer ni utiliser d'essence ou ni d'autres vapeurs ou liquides inflammables à proximité de cet appareil ou de tout autre appareil.*

— *QUE FAIRE SI VOUS SENTEZ UNE ODEUR DE GAZ*

- *Ne pas tenter d'allumer d'appareil.*
- *Ne touchez à aucun interrupteur; ne pas vous servir des téléfhones se trouvant dans le bâtiment.*
- *Appelez immédiatement votre fournisseur de gaz depuis un voisin.*
  Suivez les instructions du fournisseur.
- *Si vous ne pouvez rejoindre le fournisseur, appelez le service des incendies.*

— *L'installation et l'entretien doivent être assurés par un installateur ou un service d'entretien qualifié ou par le forunisseur de gaz.*

Installation and servicing instructions
Notice d'installation et d'entretien

DESIGN CERTIFIED

CERTIFIED

C US

ENERGY STAR

4.3 TWO PIPE SYSTEM

This type of ducting allows to disengage exhaust flue gases both outside the building and into single flue ducts.
Comburant air may be drawn in at a different site from where the flue terminal is located.
The splitting kit consists of a flue duct adaptor (100/80) and of an air duct adaptor; the latter may be placed either on the left or on the right of the flue terminal according to installation requirements.
For the air duct adaptor fit the screws and seals previously removed from the cap.

WARNING

All parts of the exhaust flue duct must be at least 1 in / 25.4 mm from any combustible materials or zero mm to combustibles if mylar sleeve is used.

4.3 CONDUITS SÉPARÉS

Ces types de conduits permettent d'utiliser des conduits séparés pour l'évacuation des gaz brûlés et des fumées à l'extérieur du bâtiment.
L'évacuation de l'air comburant peut ainsi être séparée du terminal d'évacuation des fumées.
Le kit de séparation contient un adaptateur (100/80) pour le conduit des fumées et un deuxième adaptateur pour le conduit d'air ; ce dernier peut être placé sur la gauche ou sur la droite du terminal, en fonction des besoins de l'installation.
Pour l'adaptateur du conduit d'air, utiliser les vis et les joints précédemment retirés de l'embout.

ADVERTISSEMENT

Toute partie de la conduite de décharge de la buse doit être placée au moins à 1 in / 25.4 mm de tout matériel combustible ou zéro mm du matériel combustible s'il est utilisé a manchon en mylar.

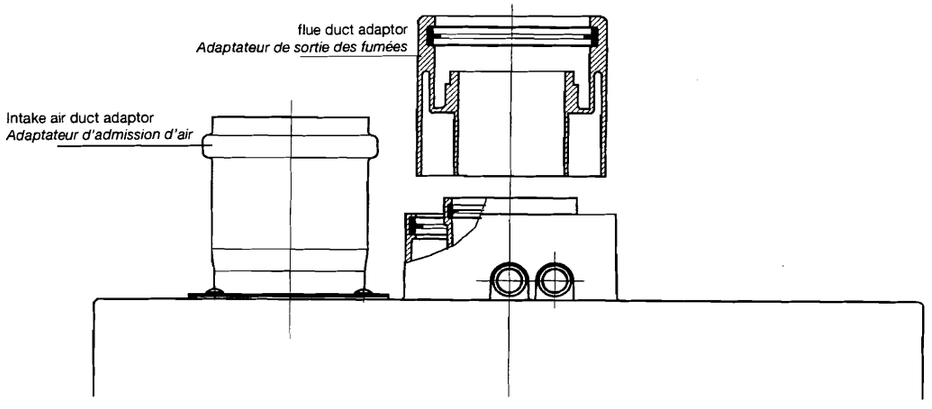

Fig. 7

The 90° bend allows to connect the boiler to flue-air ducting regardless of direction as it can be rotated by 360°. It can moreover be used as a supplementary bend to be coupled with the duct or with a 45° bend.

Le coude à 90 ° permet de raccorder les conduits des fumées et de l'air à la chaudière indépendamment de leur orientation puisqu'il peut pivoter sur 360°. Il peut également être utilisé comme coude supplémentaire en le raccordant directement au conduit ou à un coude de 45°.

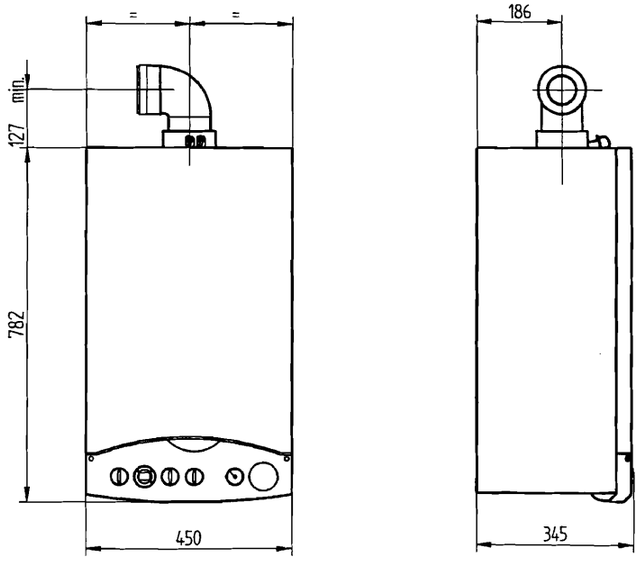

Fig. 8

A 90° bend reduces the total duct length by 0.5 m / 1.64 ft
A 45° bend reduces the total duct length by 0.25 m / 0.82 ft

Un coude de 90 ° réduit la longueur totale du conduit de 0,5 m / 1.64 ft.
Un coude de 45 ° réduit la longueur totale du conduit de 0.25 m / 0.82 ft

Separated horizontal flue termina

WARNING

Ensure a minimum downward slope
per each metre (3.28 ft) of duct leng
In the event of installation of the co
the drain duct must be directed towa

Fig. 9

The maximum length of the suction

Fig. 10