Norris Inc
2257 West Broadway
South Portland, ME 04106
1-800-370-3473

319082SP
Equipment List

Reviewed for Code Compliance
Inspections Division
Approved with Conditions

Date: 05/06/15

MANCINI ELECTRIC
179 SHERIDAN STREET
PORTLAND, ME 04101
Tel:207-774-5829 Fax:207-772-1686

USM-- Central Heat Plant

Description

NOTIFIER-NFS-320, Addressable Fire Alarm Control Panel
NOTIFIER-UDACT-2, Universal Digital Alarm Communicator Transmitter-2
R5-RJ31X, UL 8P8C RJ31X JACK
R5-804R8, SILVER SATIN 8' PLUG - PLUG
IM-12120, 12V 12AH Battery
NOTIFIER-NFN-GW-EM-3, Intelligent gateway interface for the ONYXWorks
NOTIFIER-NBG-12LX, Addressable Pull Station;w/FlashScan.
NOTIFIER-FSP-851, Intelligent Address Photo detector; w/FlashScan.
NOTIFIER-FST-851, Intelligent Address 135deg thermal detect w/FlashScan.
NOTIFIER-B210LP, Conventional Flanged Mounting Base
NOTIFIER-FMM-101, Addressable Mini Mod
WHHSR, Horn Strobe, Wall, Red, Multi Cd
WHSTR, Strobe, Wall, Red, Multi Cd
NOTIFIER-RSSWP-2475W-FR, Strobe, Wall, WP, Red
NOTIFIER-WPSBB-R, WP Back Box
Space Age-SSU00686, Fire Alarm Records Cabinet w/ Notifier Lock Kit
Knox Box, Recessed, Lift Cover, Black

NFS-320

Intelligent Addressable Fire Alarm System

NOTIF by Honey

Intelligent Fire Ala

Reviewed for Code Compliance
Inspections Division
Approved with Conditions

Date: 05/06/15

General

The NFS-320 intelligent Fire Alarm Control Panel is part of the ONYX® Series of Fire Alarm Controls from NOTIFIER.

In stand-alone or network configurations, ONYX Series products meet virtually every application requirement.

The NFS-320's modular design makes system planning easier. The panel can be configured with just a few devices for small building applications, or networked with many devices to protect a large campus or a high-rise office block. Simply add additional peripheral equipment to suit the application.

For installations using NFS-320C, an optional ACM Series annunciator can be mounted in the same cabinet (up to 48 zones/points, order separately; *see DN-60085*).

NOTE: *Unless called out with a version-specific "R", "C" or "E" at the end of the part number, "NFS-320" refers to models NFS-320, NFS-320R, NFS-320C, and NFS-320E.*

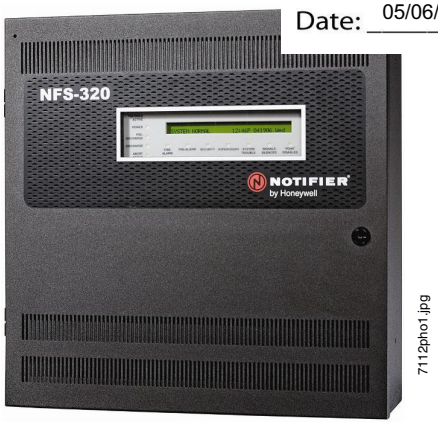

NFS-320

Features

- Certified for seismic applications when used with the appropriate seismic mounting kit.
- Approved for Marine applications when used with listed compatible equipment. *See DN-60688.*
- One isolated intelligent Signaling Line Circuit (SLC) Style 4, 6 or 7.
- Up to 159 detectors (any mix of ion, photo, thermal, or multi-sensor) and 159 modules (Addressable pull stations, normally open contact devices, two-wire smoke detectors, notification, or relay). 318 devices maximum.
- Standard 80-character display.
- Network options:
  - High-speed network for up to 200 nodes (NFS2-3030, NFS2-640, NFS-320(C), NFS-320SYS, NCA-2, DVC-EM, ONYXWorks, NFS-3030, NFS-640, and NCA).
  - Standard network for up to 103 nodes (NFS2-3030, NFS2-640, NFS-320(C), NFS-320SYS, NCA-2, DVC-EM, ONYXWorks, NCS, NFS-3030, NFS-640, NCA, AFP-200, AFP-300/400, AFP-1010, and AM2020). Up to 54 nodes when DVC-EM is used in network paging.
- 6.0 A power supply with four Class A/B built-in Notification Appliance Circuits (NAC). Selectable System Sensor, Wheelock, or Gentex strobe synchronization.
- Built-in Alarm, Trouble, Security, and Supervisory relays.
- VeriFire® Tools online or offline programming utility. Upload/Download, save, store, check, compare, and simulate panel databases. Upgrade panel firmware.
- Autoprogramming and Walk Test reports.
- Multiple central station communication options:
  - Standard UDACT
  - Internet
  - Internet/GSM
- 80-character remote annunciators (up to 32).
- EIA-485 annunciators, including custom graphics.
- Printer interface (80-column and 40-column printers).
- History file with 800-event capacity in nonvolatile memory, plus separate 200-event alarm-only file.
- Alarm Verification selection per point, with automatic counter.
- Presignal/Positive Alarm Sequence (PAS).
- Silence inhibit and Auto Silence timer options.
- NAC coding functions:
  - March time.
  - Temporal.
  - California two-stage coding.
  - Canadian two-stage.
  - Strobe synchronization.
- Field-programmable on panel or on PC, with VeriFire® Tools program check, compare, simulate.
- Full QWERTY keypad.
- Battery charger supports 18 – 200 AH batteries.
- Non-alarm points for lower priority functions.
- Remote ACK/Signal Silence/System Reset/Drill via monitor modules.
- Automatic time control functions, with holiday exceptions.
- Extensive, built-in transient protection.
- Powerful Boolean logic equations.

FlashScan® Intelligent Features

- Polls up to 318 devices in less than two seconds.
- Activates up to 159 outputs in less than five seconds.
- Multicolor LEDs blink device address during Walk Test.
- Fully digital, high-precision protocol (U.S. Patent 5,539,389).
- Manual sensitivity adjustment — up to nine levels.
- Pre-alarm ONYX intelligent sensing — up to nine levels.
- Day/Night automatic sensitivity adjustment.
- Sensitivity windows:
  - **Ion** – 0.5 to 2.5%/foot obscuration.

– **Photo** – 0.5 to 2.35%/foot obscuration.
– **Laser (VIEW®)** – 0.02 to 2.0%/foot obscuration.
– **Acclimate® Plus™** – 0.5 to 4.0%/foot obscuration.
– **IntelliQuad** – 1.0 to 4.0%/foot obscuration.
– **IntelliQuad™ PLUS –** 1.0 to 4.0%/foot obscuration

- Drift compensation (U.S. Patent 5,764,142).
- Degraded mode — in the unlikely event that the NFS-320's primary microprocessor fails, FlashScan detectors revert to degraded operation and can activate the control panel's NAC circuits and alarm relay. Each of the four built-in panel circuits includes a Disable/Enable switch for this feature.
- Multi-detector algorithm involves nearby detectors in alarm decision (U.S. Patent 5,627,515).
- Automatic detector sensitivity testing (NFPA-72 compliant).
- Maintenance alert (two levels).
- Self-optimizing pre-alarm.

FSL-751 VIEW (Very Intelligent Early Warning) Smoke Detection Technology

- Advanced ONYX intelligent sensing algorithms differentiate between smoke and non-smoke signals (U.S. Patent 5,831,524).
- Addressable operation pinpoints the fire location.
- Early warning performance comparable to the best aspiration systems at a fraction of the lifetime cost.

FAPT-851 Acclimate® Plus™ Low-Profile Intelligent Multi-Se

- Detector automatically adjusts se operator intervention or prog increases with heat.
- Microprocessor-based technology; thermal technology.
- Low-temperature warning signal a 2.77°C).

Reviewed for Code Compliance
Inspections Division
Approved with Conditions
Date: 05/06/15

FSC-851 IntelliQuad Advanced Multi-Criteria Detector

- Detects all four major elements of a fire (smoke, heat, CO, and flame).
- Automatic drift compensation of smoke sensor and CO cell.
- High nuisance-alarm immunity.

FSA-8000 Intelligent FAAST Detector

- Connects directly to the SLC loop of compatible ONYX series panels
- Provides five event thresholds that can be individually programmed with descriptive labels for control-by-event programming; uses five detector addresses.
- Uses patented particle separator and field-replaceable filter to remove contaminants.
- Advanced algorithms reject common nuisance conditions

FCO-851 IntelliQuad™ PLUS *Advanced Multi-Criteria Fire/CO Detector*

- Detects all four major elements of a fire.
- Separate signal for life-safety CO detection.

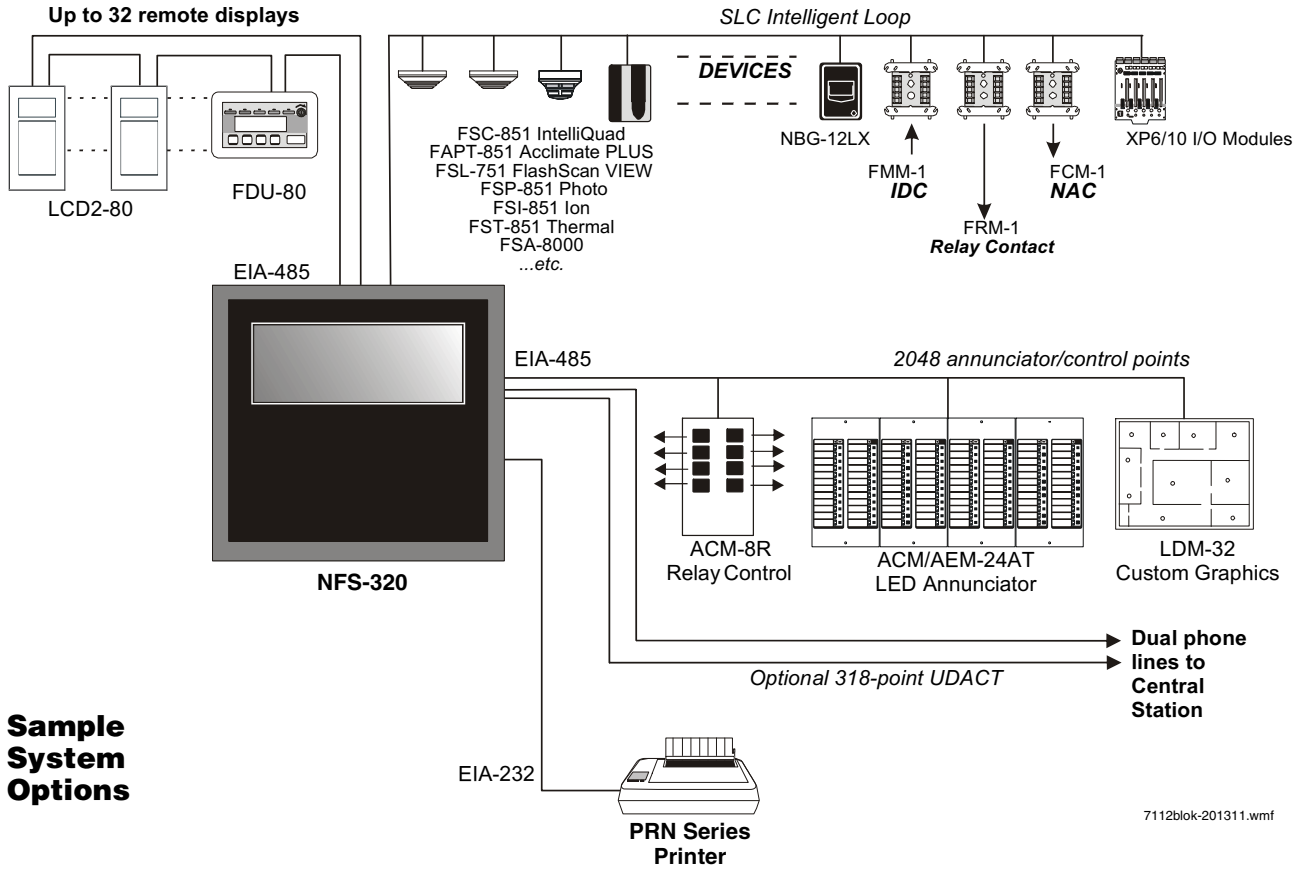

Sample System Options

- Optional addressable sounder base for Temp-3 (fire) or Temp-4(CO) tone.
- Automatic drift compensation of smoke sensor and CO cell.
- High nuisance-alarm immunity.

Releasing Features

- Ten independent hazards.
- Sophisticated cross-zone (three options).
- Delay timer and Discharge timers (adjustable).
- Abort (four options).
- Low-pressure CO_2 listed.

Voice Features

- Integrates with FirstCommand Series. *See DN-60772.*
- Telephone applications require NFC-FFT.

High-Efficiency Offline Switching 3.0 A Power Supply (6.0 A in Alarm)

- 120 VAC (NFS-320/NFS-320C); 240 VAC (NFS-320E).
- Displays battery current/voltage on panel (with display).

FlashScan, Exclusive World-Leading Detector Protocol

At the heart of the NFS-320 is a set of detection devices and device protocol — FlashScan (U.S. Patent 5,539,389). FlashScan is an all-digital protocol that gives superior precision and high noise immunity.

In addition to providing quick identification of an active input device, this protocol can also activate many output devices in a fraction of the time required by competitive protocols. This high speed also allows the NFS-320 to have the largest device per loop capacity in the industry — 318 points — yet every input and output device is sampled in less than two seconds. The microprocessor-based FlashScan detectors have bicolor LEDs that can be coded to provide diagnostic information, such as device address during Walk Test.

ONYX Intelligent Sensing

Intelligent sensing is a set of software algorithms that provides the NFS-320 with industry-leading smoke detection capability. These complex algorithms require many calculations on each reading of each detector, and are made possible by the high-speed microcomputer used by the NFS-320.

Drift Compensation and Smoothing: Drift compensation allows the detector to retain its original ability to detect actual smoke, and resist false alarms, even as dirt accumulates. It reduces maintenance requirements by allowing the system to automatically perform the periodic sensitivity measurements required by NFPA 72. Smoothing filters are also provided by software to remove transient noise signals, such as those caused by electrical interference.

Maintenance Warnings: When the drift compensation performed for a detector reaches a certain level, the performance of the detector may be compromised, and special warnings are given. There are three warning levels: (1) Low Chamber value; (2) Maintenance Alert, indicative of dust accumulation that is near but below the allowed limit; (3) Maintenance Urgent, indicative of dust accumulation above the allowed limit.

Sensitivity Adjust: Nine sensitivity levels are provided for alarm detection. These levels can be set manually, or can change automatically between day and night. Nine levels of pre-alarm sensitivity can also be sele
termined levels of alarm. Pre-alarm op
or self-restoring, and can be used to
functions.

Self-Optimizing Pre-Alarm: Each d
"Self-Optimizing" pre-alarm. In this sp
tor "learns" its normal environment, m
log readings over a long period of tim
alarm level just above these normal p

RESURGAM CITY OF PORTLAND, MAINE
Reviewed for Code Compliance
Inspections Division
Approved with Conditions
Date: 05/06/15

Cooperating Multi-Detector Sensing: A patented feature of ONYX intelligent sensing is the ability of a smoke sensor to consider readings from nearby sensors in making alarm or pre-alarm decisions. Without statistical sacrifice in the ability to resist false alarms, it allows a sensor to increase its sensitivity to actual smoke by a factor of almost two to one.

Field Programming Options

Autoprogram is a timesaving feature. The FACP "learns" what devices are physically connected and automatically loads them in the program with default values for all parameters. Requiring less than one minute to run, this routine allows the user to have almost immediate fire protection in a new installation, even if only a portion of the detectors are installed.

Keypad Program Edit (with KDM-R2) The NFS-320, like all NOTIFIER intelligent panels, has the exclusive feature of program creation and editing capability from the front panel keypad, while continuing to provide fire protection. The architecture of the NFS-320 software is such that each point entry carries its own program, including control-by-event links to other points. This allows the program to be entered with independent per-point segments, while the NFS-320 simultaneously monitors other (already installed) points for alarm conditions.

VeriFire® Tools is an offline programming and test utility that can greatly reduce installation programming time, and increase confidence in the site-specific software. It is Windows®-based and provides technologically advanced capabilities to aid the installer. The installer may create the entire program for the NFS-320 in the comfort of the office, test it, store a backup file, then bring it to the site and download from a laptop into the panel.

Placement of Equipment in Chassis and Cabinet

The following guidelines outline the NFS-320's flexible system design.

Wiring: When designing the cabinet layout, consider separation of power-limited and non-power-limited wiring as discussed in the *NFS-320 Installation Manual.*

It is critical that all mounting holes of the NFS-320 are secured with a screw or standoff to ensure continuity of Earth Ground.

Networking: If networking two or more control panels, each unit requires a Network Communication Module or High-Speed Network Communication Module (HS-NCM can support two nodes; see "Networking Options" on page 4). These modules can be installed in any option board position (see manual), and additional option boards can be mounted in front of them.

KDM-R2 Controls and Indicators

Program Keypad: QWERTY type (keyboard layout).

12 LED Indicators: Power; Fire Alarm; Pre-Alarm; Security; Supervisory; System Trouble; Signals Silenced; Points Disabled; Control Active; Abort; Pre-Discharge; Discharge.

Keypad Switch Controls: Acknowledge/Scroll Display; Signal Silence; Drill; System Reset; Lamp Test.

LCD Display: 80 characters (2 x 40) with long-life LED backlight.

Product Line Information

- "Configuration Guidelines" on page 4
- "Networking Options" on page 4
- "Auxiliary Power Supplies and Batteries" on page 4
- "Audio Options" on page 4
- "Compatible Devices, EIA-232 Ports" on page 4
- "Compatible Devices, EIA-485 Ports" on page 4
- "Compatible Intelligent Devices" on page 5
- "Enclosures, Chassis, and Dress Plates" on page 5
- "Other Options" on page 6

Configuration Guidelines

The NFS-320 system ships assembled; description and some options follow. See "Enclosures, Chassis, and Dress Plates" on page 5 for information about mounting peripherals.

NOTE: *Stand-alone and network systems require a main display. On stand-alone systems, the panel's keypad provides the required display. On network systems (two or more networked fire panel nodes), at least one NCA-2, NCS, or ONYXWorks annunciation device is required. (For NCA-2, see DN-7047.)*

NFS-320: The standard, factory-assembled NFS-320 system includes the following components: one control panel mounted on chassis (120 V operation — ships with grounding cable, battery interconnect cables, and document kit); includes integral power supply mounted to the main circuit board; one primary display KDM-R2 keypad/display; and one cabinet for surface or semi-flush mounting. *Purchase batteries separately. One or two option boards may be mounted inside the NFS-320 cabinet; additional option boards can be used in remote cabinets. (Non-English versions also available. NFS-320-SP, NFS-320-PO.)*

NFS-320R: Same as NFS-320, but in red enclosure.

NFS-320C: Based on NFS-320 above. NFS-320C supports installation of an optional ACM-series annunciator in the same cabinet. UL- and ULC-listed. *(Non-English version also available: NFS-320C-FR.) For NFS-320C, see DN-60085.*

NFS-320CR: Same as NFS-320C but in a red enclosure. *For NFS-320C, see DN-60085.*

NFS-320E: Same as NFS-320, but with 240 V operation. *(Non-English versions also available. NFS-320E-SP, NFS-320E-PO.)*

TR-320: Trim ring for the NFS-320 cabinet.

Networking Options

NCM-W, NCM-F: Standard Network Communications Modules. Wire and multi-mode fiber versions available. *See DN-6861.*

HS-NCM-W/MF/SF/WMF/WSF/MFSF: High-speed Network Communications Modules. Wire, single-mode fiber, multi-mode fiber, and media conversion mo
DN-60454.

RPT-W, RPT-F, RPT-WF: Standard-n
with wire connection (RPT-W), multi-
(RPT-F), or allowing a change in me
and fiber (RPT-WF). Not used with hig
DN-6971.

ONYXWorks: UL-listed graphics PC
and computer hardware. *See DN-704*
bers.

Reviewed for Code Compliance
Inspections Division
Approved with Conditions
Date: 05/06/15

NFN-GW-EM-3: NFN Gateway, embedded. *See DN-60499.*

NWS-3: NOTI•FIRE•NET™ Web Server. *See DN-6928.*

CAP-GW: Common Alerting Protocol Gateway. *See DN-60576.*

VESDA-HLI-GW: VESDAnet high-level interface gateway. *See DN-60753.*

LEDSIGN-GW: UL-listed sign gateway. Interfaces with classic and high-speed NOTI•FIRE•NET networks through the NFN Gateway. *See DN-60679.*

OAX2-24V: UL-listed LED sign, used with LEDSIGN-GW. *See DN-60679.*

Auxiliary Power Supplies and Batteries

ACPS-610: 6.0 A or 10.0 A addressable charging power supply. *See DN-60244.*

APS2-6R: Auxiliary Power Supply. Provides up to 6.0 amperes of power for peripheral devices. Includes battery input and transfer relay, and overcurrent protection. Mounts on two of four positions on a CHS-4L or CHS-4 chassis. *See DN-5952.*

FCPS-24S6/S8: Remote 6 A and 8 A power supplies with battery charger. See *DN-6927.*

BAT Series: Batteries. NFS-320 uses two 12 volt, 18 to 200 AH batteries. *See DN-6933.*

Audio Options

NFC-50/100: 25 watt, 25 VRMS, emergency Voice Evacuation Control Panel (VECP) with integral commercial microphone, digital message generator, and Class A or Class B speaker circuits. *See DN-60772.*

Compatible Devices, EIA-232 Ports

PRN-6: 80-column printer. *See DN-6956.*

VS4095/5: Printer, 40-column, 24 V. Mounted in external backbox. *See DN-3260.*

DPI-232: Direct Panel Interface, specialized modem for extending serial data links to remotely located FACPs and/or peripherals; mount on NFS-320 chassis. *See DN-6870.*

Compatible Devices, EIA-485 Ports

ACM-24AT: ONYX Series ACS annunciator – up to 96 points of annunciation with Alarm or Active LED, Trouble LED, and switch per circuit. Active/Alarm LEDs can be programmed (by powered-up switch selection) by point to be red, green, or yellow; the Trouble LED is always yellow. *See DN-6862.*

AEM-24AT: Same LED and switch capabilities as ACM-24AT, expands the ACM-24AT to 48, 72, or 96 points. *See DN-6862.*

ACM-48A: ONYX Series ACS annunciator – up to 96 points of annunciation with Alarm or Active LED per circuit. Active/Alarm LEDs can be programmed (by powered-up switch

selection) in groups of 24 to be red, green, or yellow. Expandable to 96 points with one AEM-48A. *See DN-6862.*

AEM-48A: Same LED capabilities as ACM-48A, expands the ACM-48A to 96 points. *See DN-6862.*

ACM-8R: Remote Relay Module with eight Form-C contacts. Can be located up to 6,000 ft. (1828.8 m) from panel on four wires. *See DN-3558.*

FDU-80: Terminal mode. 80-character, backlit LCD display. Mounts up to 6,000 ft. (1828.8 m) from panel. Up to 32 per FACP. *See DN-6820.*

LCD2-80: Terminal and ACS mode. 80-character, backlit LCD display. Mounts up to 6,000 ft. (1828.8 m) from panel. Up to 32 per FACP. *See DN-60548.*

LDM: Lamp Driver Modules LDM-32, LDM-E32, and LDM-R32; remote custom driver modules. *See DN-0551.*

SCS: Smoke control stations SCS-8, SCE-8, with lamp drivers SCS-8L, SCE-8L; eight (expandable to 16) circuits (HVAC only). *See DN-4818.*

TM-4: Transmitter Module. Includes three reverse-polarity circuits and one municipal box circuit; mount on NFS-320 chassis or remotely. *See DN-6860.*

UDACT-2: Universal Digital Alarm Communicator Transmitter, 636 channel. *See DN-60686.*

UZC-256: Programmable Universal Zone Coder provides positive non-interfering successive zone coding. Microprocessor-controlled, field-programmable from IBM®-compatible PCs (requires optional programming kit). Mounts in **BB-UZC**. *See DN-3404.*

Compatible Intelligent Devices

FSA-8000: Intelligent FAAST Fire Alarm Aspiration Sensing Technology®. Intelligent aspirating smoke detector. For Canadian applications, order FSA-8000A. *See DN-60792.*

FSB-200: Intelligent beam smoke detector. *See DN-6985.*

FSB-200S: Intelligent beam smoke detector with integral sensitivity test. *See DN-6985*

FSC-851: FlashScan IntelliQuad Advanced Multi-Criteria Detector. *See DN-60412.*

FCO-851: FlashScan IntelliQuad PLUS Advanced Multi-Criteria Fire/CO Detector. *See DN-60689.*

FSI-851: Low-profile FlashScan ionization detector. *See DN-6934.*

FSP-851: Low-profile FlashScan photoelectric detector. *See DN-6935.*

FSP-851T: Low-profile FlashScan photoelectric detector with 135°F (57°C) thermal. *See DN-6935.*

FSP-851R: Remote-test capable photoelectric detector for use with DNR(W) duct detector housings. *See DN-6935.*

FST-851: FlashScan thermal detector 135°F (57°C). *See DN-6936.*

FST-851R: FlashScan thermal detector 135°F (57°C) with rate-of-rise. *See DN-6936.*

FST-851H: FlashScan 190°F (88°C) high-temperature thermal detector. *See DN-6936.*

FAPT-851: FlashScan Acclimate Plus low-profile multi-sensor detector. *See DN-6937.*

FSL-751: FlashScan VIEW laser photo detector. *See DN-6886.*

DNR: InnovairFlex low-flow non-relay (order FSP-851R separately). Repla 751RPL. *See DN-60429.*

DNRW: Same as above with NEMA-4 *DN-60429.*

B224RB: Low-profile relay base. *See*

B224BI: Isolator base for low-profil *60054.*

B210LP: Low-profile base. Standard U.S. style. Replaces B710LP. *See DN-60054.*

B501: European-style, 4" (10.16 cm) base. *See DN-60054.*

B200S: Intelligent programmable sounder base, capable of producing a variety of tone patterns including ANSI Temporal 3. Compatible with sychronization protocol. *See DN-60054.*

B200SR: Sounder base, Temporal 3 or Continuous tone. *See DN-60054.*

FMM-1: FlashScan monitor module. *See DN-6720.*

FDM-1: FlashScan dual monitor module. *See DN-6720.*

FZM-1: FlashScan two-wire detector monitor module. *See DN-6720.*

FMM-101: FlashScan miniature monitor module. *See DN-6720.*

FCM-1: FlashScan control module. *See DN-6724.*

FCM-1-REL: FlashScan releasing control module. *See DN-60390.*

FRM-1: FlashScan relay module. *See DN-6724.*

FDRM-1: FlashScan dual monitor/dual relay module. *See DN-60709.*

NBG-12LX: Manual pull station, addressable. *See DN-6726.*

ISO-X: Isolator module. *See DN-2243.*

XP6-C: FlashScan six-circuit supervised control module. *See DN-6924.*

XP6-MA: FlashScan six-zone interface module; connects intelligent alarm system to two-wire conventional detection zone. *See DN-6925.*

XP6-R: FlashScan six-relay (Form-C) control module. *See DN-6926.*

XP10-M: FlashScan ten-input monitor module. *See DN-6923.*

SLC-IM: SLC integration module, for VESDAnet detectors. *See DN-60755.*

Enclosures, Chassis, and Dress Plates

CAB-BM Marine System: Protects equipment in shipboard and waterfront applications. Also order **BB-MB** for systems using 100 AH batteries. For a full list of required and optional equipment, see *DN-60688.*

BB-UZC: Backbox for housing the UZC-256. Required for NFS-320 applications. Black. For red, order BB-UZC-R.

NFS-LBB: Battery Box (required for batteries larger than 26 AH).

NFS-LBBR: Same as above, but red.

SEISKIT-320/B26: Seismic mounting kit. Required for seismic-certified applications with NFS-320 and BB-26. Includes battery bracket for two 26 AH batteries.

RESURGAM CITY OF PORTLAND, MAINE
Reviewed for Code Compliance
Inspections Division
Approved with Conditions
Date: 05/06/15

SEISKIT-BB25: Seismic mounting kit for the BB-25. Includes battery bracket for two 26 AH batteries.

SEISKIT-LBB: Seismic kit for the NFS-LBB. Includes battery bracket for two 55 AH batteries.

Other Options

411: Slave Digital Alarm Communicator. *See DN-6619.*

411UDAC: Digital Alarm Communicator. *See DN-6746.*

IPDACT-2/2UD, IPDACT Internet Monitoring Module: Connects to primary and secondary DACT telephone output ports for internet communications over customer-provided Ethernet connection. Requires compatible Teldat VisorALARM Central Station Receiver. Can use DHCP or static IP. *See DN-60408.*

IPSPLT: Y-adapter option allow connection of both panel dialer outputs to one IPDACT-2/2UD cable input.

IPENC: External enclosure for IPDACT, includes IPBRKT mounting bracket; Red. For Black order **IPENC-B**.

IPGSM-4G: Internet and Digital Cellular Fire Alarm Communicator. Provides selectable configurable paths: cellular only, IP only, or IP primary with cellular backup. Connects to the primary and secondary ports of a DACT. *See DH-60769.*

NFS-320-RB: Replacement board with central processing unit (CPU). *NOTE: Keypad must be removed before shipping old unit out for repair.*

- NFS-320-RBE: Replacement CPU, Export.
- NFS-320-RB-PO: Replacement CPU, Portuguese.
- NFS-320-RB-POE: Replacement CPU, Export, Portuguese.
- NFS-320-RBC-FR: Replacement CPU, Canadian French.
- NFS-320-RB-SP: Replacement CPU, Spanish.
- NFS-320-RB-SPE: Replacement CPU, Export, Spanish.

NOTE: *For other options including compatibility with retrofit equipment, refer to the panel's installation manual, the SLC manual, and the Device Compatibility Document.*

System Specifications

System Capacity

- Intelligent Signaling Line Circuits 1
- Intelligent detectors 159
- Addressable monitor/control modules 159
- Programmable internal hardware and output circuits 4
- Programmable software zones 99
- Special programming zones 14
- LCD annunciators per NFS-320/-320E 32
- ACS annunciators per NFS-320/-320E ..... 32 addresses x 64 points

Specifications

- Primary input power
  - NFS-320: 120 VAC, 50/60 Hz, 5.0 A.
  - NFS-320E: 220/240 VAC, 50/60 Hz, 2.5 A.
- Current draw (standby/alarm):
  - NFS-320(E) board: 0.250 A. Add in use.
  - KDM-R2 (Backlight on): 0.100 A.
- Total output 24 V power: 6.0 A in al

NOTE: *The power supply has a total of This is shared by all internal circuits. See complete current draw calculation sheet.*

- Standard notification circuits (4): 1.
- Resettable regulated 24V power: 1.25 A.
- Two non-resettable regulated 24V power outputs:
  - 1.25 A.
  - 0.50 A.
- Non-resettable 5V power: 0.15 A.
- Battery charger range: 18 AH – 200 AH. Use separate cabinet for batteries over 26 AH.
- Float rate: 27.6 V.

Cabinet Specifications

NFS-320 cabinet dimensions:

- Backbox: 18.12 in. (46.025 cm) width; 18.12 in. (46.025 cm) height; 5.81 in. (14.76 cm) depth.
- Door: 18.187 in. (46.195 cm) width; 18.40 in. (46.736 cm) height; 0.75 in. (1.905 cm) depth.
- Trim ring: Molding width is 0.905 in. (2.299 cm).
- Shipping weight (without batteries): 36.15 lb. (16.4 kg).

Temperature and Humidity Ranges

This system meets NFPA requirements for operation at 0 – 49°C/32 – 120°F and at a relative humidity 93% ± 2% RH (noncondensing) at 32°C ± 2°C (90°F ± 3°F). However, the useful life of the system's standby batteries and the electronic components may be adversely affected by extreme temperature ranges and humidity. Therefore, it is recommended that this system and its peripherals be installed in an environment with a normal room temperature of 15 – 27°C/ 60 – 80°F.

Agency Listings and Approvals

The listings and approvals below apply to the basic NFS-320 control panel. In some cases, certain modules may not be listed by certain approval agencies, or listing may be in process. Consult factory for latest listing status.

- **UL Listed:** S635.
- **ULC Listed:** S635 (NFS-320C only, excludes IPDACT).
- **FM Approved.**
- **CSFM:** 7165-0028:0243.
- **MEA:** 128-07-E.
- **FDNY:** COA#6085, #6121.
- **City of Chicago.**

NOTE: *For additional information on UL- and ULC-listed model NFS-320C, see DN-60085. For information on NFS-320SYS, see DN-60637.*

Marine Applications: Marine approved systems must be configured using components itemized in this document. (See Main System Components, in "Product Line Information.) Specific connections and requirements for those components are described in the installation document,

RESURGAM CITY OF PORTLAND, MAINE
Reviewed for Code Compliance
Inspections Division
Approved with Conditions
Date: 05/06/15

PN 54756. When these requirements are followed, systems are approved by the following agencies:

- **US Coast Guard** 161.002/50/0, 161.002/55/0 (Standard 46 CFR and 161.002).
- **Lloyd's Register** 11/600013 (ENV 3 category).
- **American Bureau of Shipping** (ABS) Type Approval.

NOTE: *For information on marine applications, see DN-60688.*

STANDARDS

The NFS-320 complies with the following UL Standards and NFPA 72, International Building Code (IBC), and California Building Code (CBC) Fire Alarm Systems requirements:

- **UL 864** (Fire).
- **UL 1076** (Burglary).
- **UL 2572** (Mass Notification Systems).
- **LOCAL** (Automatic, Manual, Waterflow and Sprinkler Supervisory).
- **AUXILIARY** (Automatic, Manual and Waterflow) (requires TM-4).
- **REMOTE STATION** (Automatic, Manual, Waterflow and Sprinkler Supervisory) (requires TM-4).
- **PROPRIETARY** (Automatic, Manual, Waterflow and Sprinkler Supervisory). *Not applicable for FM.*
- **CENTRAL STATION** (Automatic, Manual, Waterflow and Sprinkler Supervisory) (requires DACT).
- **EMERGENCY VOICE/ALARM**.
- **OT, PSDN** (Other Technologies, Packet-switched Data Network).
- **IBC 2012, IBC 2009, IBC 2006, IBC 2003, IBC 2000** (Seismic).
- **CBC 2007** (Seismic).

RESURGAM CITY OF PORTLAND, MAINE
Reviewed for Code Compliance
Inspections Division
Approved with Conditions
Date: 05/06/15

Reviewed for Code Compliance
Inspections Division
Approved with Conditions

Date: 05/06/15

NOTI•FIRE•NET™, **IntelliQuad**™, and **ONYXWorks**™ are trademarks; and **Acclimate® Plus™**, **FirstCommand®**, **FlashScan®**, **NOTIFIER®**, **ONYX®**, **VeriFire®**, and **VIEW®** are registered trademarks of Honeywell International Inc. **Microsoft®** and **Windows®** are registered trademarks of Microsoft Corporation. **IBM®** is a registered trademark of IBM Corporation.
©2013 by Honeywell International Inc. All rights reserved. Unauthorized use of this document is strictly prohibited.

ISO 9001 CERTIFIED
ENGINEERING & MANUFACTURING QUALITY SYSTEMS

This document is not intended to be used for installation purposes.
We try to keep our product information up-to-date and accurate.
We cannot cover all specific applications or anticipate all requirements.
All specifications are subject to change without notice.

Made in the U.S. A.

For more information, contact Notifier. Phone: (203) 484-7161, FAX: (203) 484-7118.
www.notifier.com

UDACT-2

Universal Digital Alarm Communicator Transmitter

NOTIF by Honeywell

Annunciat

Reviewed for Code Compliance
Inspections Division
Approved with Conditions

Date: 05/06/15

General

The Universal Digital Alarm Communicator Transmitter (UDACT-2) is designed for use on Notifier Fire Alarm Control Panels and on the NCA-2 Network Control Annunciator. When used in conjunction with the NCA-2 network control annunciator, the UDACT-2 can report the status of all control panels on NOTI•FIRE•NET™. The UDACT-2 transmits system status to UL listed Central Station Receivers via the public switched telephone network. The UDACT-2 can be installed in the panel cabinet or remotely in a separate enclosure.

NOTE: *The UDACT-2 can also be used with legacy panels. Please refer to the UDACT-2 manual for more information.*

The UDACT-2 upload/download programming and firmware updates are accomplished with VeriFire Tools. Refer to the Programming Section for further details.

The UDACT-2 is capable of transmitting the status of software zones (Alarm and Trouble), System Trouble, Panel Off-Normal, Supervisory, Bell Trouble, Low Battery, and AC Fail. The UDACT-2 is capable of transmitting all of the zone and point status associated with each panel.

When the UDACT-2 is used with the NFS-3030, NFS2-3030, and NCA-2 it is capable of reporting up to 2,040 points. Reporting may be in the form of points or zones (refer to the UDACT-2 manual for specific reporting parameters). Points transmitted may be programmed for a variety of types, including fire, waterflow, supervisory, etc.

NOTE: *Descriptions regarding point capacity, listed above, are for receivers which receive in Ademco Contact ID format. See chart on page 2 for compatible receivers.*

Features

- Programmable with VeriFire Tools version 6.60 or higher, allowing the UDACT-2 programming to be uploaded/downloaded and saved.
- Maximum of 14 point trouble messages transmitted per hour.
- Dual phone lines with line voltage detect.
- Compact in size: 6.75" x 4.25" (17.145 x 10.795 cm).
- USB port for upload/download programming.
- Manual Test Report function.
- Manual Transmission Clear function.
- Mounts in a separate enclosure (ABS-8RB or UBS-1B/R).
- Communicates vital system status including:
  - Independent zone fire alarm.
  - Independent zone non-fire alarm.
  - Independent zone trouble.
  - Independent zone supervisory.
  - AC (mains) Power Loss (programmable).
  - Low Battery and Earth Fault.
  - System Off-Normal.
  - 12 or 24 hour test signal.
  - Abnormal Test Signal per new UL requirements.
  - EIA-485 Communication Bus Failure.
- Annunciation of UDACT-2 Troubles including: loss of phone lines, communication failure with either Central Station, total communications failure.
- Individual LEDs for: Power, EIA-485 Loss, Manual Test, Kissoff, Comm Fail, Primary Line Seize, Secondary Line Seize and Modem Communications.

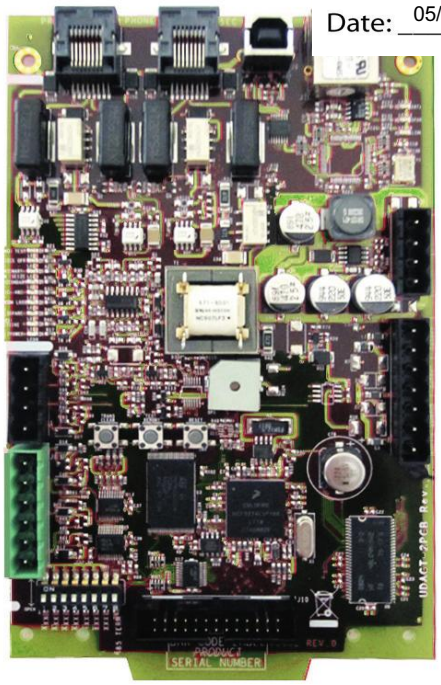

UDACT-2

- Open Collector relay driver for Total Communications Failure or UDACT-2 trouble.
- Real-time clock.
- Extensive transient protection.
- EIA-485 interface to host panel.

Programming

The UDACT-2 programming is created and downloaded using VeriFire Tools. This enables the unit to be programmed prior to installation, be easily modified, and saved either online or offline. A printed report with point or zone information can be generated from VeriFire Tools for an ONYX Series panel or network annunciator. The point report consists of the central station point address, ACS point, ACS point function, panel label, panel point, type code, custom and extended label, alarm verification, walktest participation, presignal, and PAS information. The zone report consists of a grid with the central station point address, ACS point address, source, ACS point function, custom label and panel label. This report may be sent to the Central Station for their records. VeriFire Tools also supports upgrading the UDACT-2 operating firmware.

Communication Formats

- Ademco Contact ID
- 4+2 Standard
- SIA

NOTE: *Ademco Contact ID must be used for independent zone reporting.*

Type Mode Feature

Ademco Contact ID format - only Use Type Mode to identify reports to Central Station as:

- Fire Alarm
- Supervisory
- Pull Station
- Heat Detector
- Waterflow
- Duct Detector
- Flame Sensor
- Smoke Zone
- Burglary
- 24 hour Non-Burglary
- High Temperature
- Low Temperature
- Low Water Pressure
- Low Water Level
- Pump Failure

Electrical Specifications

Standby current: 40 mA.

Current while communicating: 75 mA.

Maximum current *while communicating and with open collector output activated*: 100 mA.

Voltage: Regulated 24 volts. Range: 21.2 to 28.2 volts.

Agency Listings and Approvals

In some cases, certain modules may not be listed by certain approval agencies, or listing may be in process. Consult factory for latest listing status.

- UL/ULC Listed: S635
- FM Approved
- CSFM: 7165-0028:0243 (NFS2-640/320), 7165-0028:0224 (NFS2-3030)
- FDNY: COA#6085, COA#6098

Ordering Information

UDACT-2: Universal Digital Alarm Communicator Transmitter. Includes operating and programming instructions, and mounting hardware.

MCBL-7: DACT phone cord, 7 ft (2.13 m) long (two required).

ABS-8RB: Metal enclosure for externally mounting UDACT-2 up to 6,000 ft./1828.8 m from host FACP. 9.94" H x 4.63" W x 2.50" D (cm: 25.248 H x 11.760 W x 6.350 D).

UBS-1B: Metal enclosure with solid door, Black.

UBS-1BR: Metal enclosure with solid door, Red.

R-10E: SPDT Form-C relay. Contacts rated for 10 A @ 115 VAC. Connects to open collector relay driver.

R-20E: DPDT Two Form-C relays. Contacts rated for 10A @ 115 VAC. Connects to open collector relay driver.

FBD-1: Ferrite bead kit. Use for remote mounting only.

UL Listed Receivers

The chart below shows UL listed recei
UDACT-2. A check in the protocol colur
supports that protocol.

Reviewed for Code Compliance
Inspections Division
Approved with Conditions

Date: 05/06/15

Receiver	4+2 Standa 1800/23		
Ademco 685 (1)	✔	✔	
Ademco MX8000 (2)	✔	✔	✔
Silent Knight 9500 (3)	✔	✔	✔
Silent Knight 9800 (4)	✔	✔	✔
FBI CP220FB (5)	✔	✔	✔
Osborne Hoffman 2000E (6)		✔	✔
Radionics 6600 (7)		✔	✔
SurGard MLR2 (8)	✔	✔	
SurGard System III (9)		✔	✔
SurGard MLR-2000 (10)		✔	

(1) With 685-8 Line Card with Rev 4.4d software
(2) With 124060V206B and 124063 Line Card Rev B
(3) With version V2.4 Receiver & 126047 Line Card Rev G
(4) With 124077V2.00 Receiver &126047 Line Card Rev M
(5) With software V3.9
(6) With V.7301 Receiver S/W
(7) With 01.01.03 Receiver S/W & Line Card 01.01.03
(8) With software V1.86
(9) With sotware V1.72
(10) With DSP4016 and V1.6 Line Card

NOTI•FIRE•NET™ is a trademark and Notifier® is a registered trademark of Honeywell International Inc.
©2012 by Honeywell International Inc. All rights reserved. Unauthorized use of this document is strictly prohibited.

ISO 9001 CERTIFIED
ENGINEERING & MANUFACTURING QUALITY SYSTEMS

This document is not intended to be used for installation purposes.
We try to keep our product information up-to-date and accurate.
We cannot cover all specific applications or anticipate all requirements.
All specifications are subject to change without notice.

Made in the U.S. A.

For more information, contact Notifier. Phone: (203) 484-7161, FAX: (203) 484-7118.
www.notifier.com

ONYXWorks® NFN

Gateway-3

NOTIF by Honey

Reviewed for Code Compliance
Inspections Division
Approved with Conditions

Date: 05/06/15

General

The NOTI•FIRE•NET™ Gateway is an intelligent gateway interface for the ONYXWorks® fire monitoring workstation. This gateway facilitates complete monitoring and control of a NOTI•FIRE•NET™ network. In addition, it supports full panel programming and network diagnostics.

The embedded gateway is a standalone version and is equipped with IP capability thus enabling ONYX® Series users to monitor multiple sites over an Ethernet network without the need for remote workstations.

Features

- Enables ONYX® Series workstation to monitor alarm, pre-alarm, trouble, disabled events, etc. for Notifier fire alarm control panels.
- Compatible with standard and high speed NOTI•FIRE•NET™ network.
- Adds acknowledge, silence, reset, enable/disable, and activate/deactivate control capability to the workstation.
- Supports fire alarm control panel programming upload/ downloads and modifications.
- Embedded gateway allows remote IP connections and increases scalability of network.
- Supervised IP connections for remote workstations and gateways.
- Multiple workstations and FirstVisions can access the gateway at the same time.
- Gateway redundancy for network survivability.

Compatibility

The NOTI•FIRE•NET™ Gateway is compatible with ONYXWorks® and ONYX FirstVision and interfaces to NOTI•FIRE•NET™ version 5.0 and higher, as well as a high speed NOTI•FIRE•NET™ network for the following panels and devices:

- ONYX Series
- AM2020/AFP1010 (version 5.0 SIB-NET)
- AFP-200 (version 5.0 NAM)
- AFP-300/AFP-400 (version 5.0 NAM)
- BACnet Gateway
- NCA-2/NCA Network Control Annunciator
- NOTI•FIRE•NET™Web Server

Specifications

- Power input: 24 VDC
- Input current: 450 mA @ 24 VDC with or without NCM.
- Operating temperature: 0°C to 49°C (32°F to 120°F).
- Direct connection to NFS2-640, NFS640, NFS-320, NFS2-3030, and NFS-3030 fire alarm control panels. NCM required for connection to NOTI•FIRE•NET™ and high speed NFN. (see data sheet DN-6861).

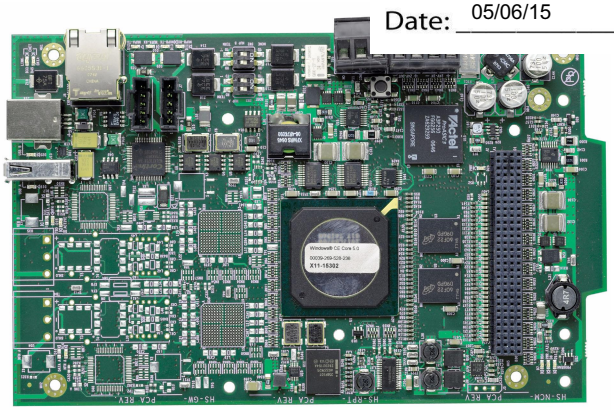

NFN-GW-EM-3

Standards and Codes

The NOTI•FIRE•NET™ Gateway complies with the following UL/ULC Standards and NFPA 72 Fire Alarm Systems requirements:

– UL 864
– UL 1076
– UL 2017
– ULC S559-04
– ULC S527-99

Listings and Approvals

These listings and approvals apply to the modules specified in this document. In some cases, certain modules or applications may not be listed by certain approval agencies, or listing may be in process. Consult factory for latest listing status.

- **UL / ULC:** S5526; S5697
- **CSFM:** 7300-1525:103
- **MEA:** 286-07-E

Ordering Information

NFN-GW-EM-3: NOTI•FIRE•NET™ Gateway, embedded. Includes PC board, NUP to NUP cable (75556), USB Cable (75665) and NFN Configuration tool.

Additional EMBEDDED VERSION Gateway required components:

- NCM for connection to NOTI•FIRE•NET™.
- IBM®-compatible PC with Windows® XP.
- Standard Ethernet network cable with RJ45 to RJ45 connectors.
- ONYXWorks Workstation V3.11 or First Vision 1.7 or above.
- NFN Network Version 5.0 or above.
- Verifire Tools Version 5.7.

Remote Monitoring

7060ap2a.wmf

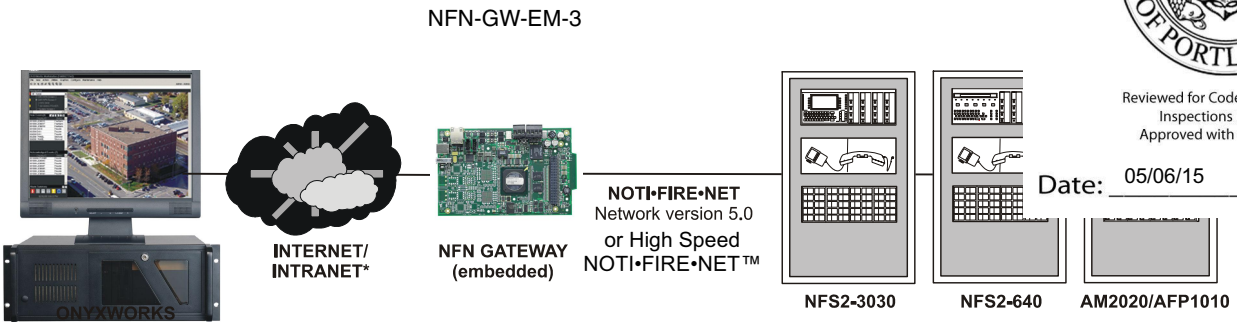

Reviewed for Code Compliance
Inspections Division
Approved with Conditions

Date: 05/06/15

* A UL Listed ethernet (TCP/IP) switch is required between a shared-IP network and the ONYXWORKS equipment. Contemporary Control Systems, Inc. (www.ctrlink.com) has several UL864 recognized switching hubs.

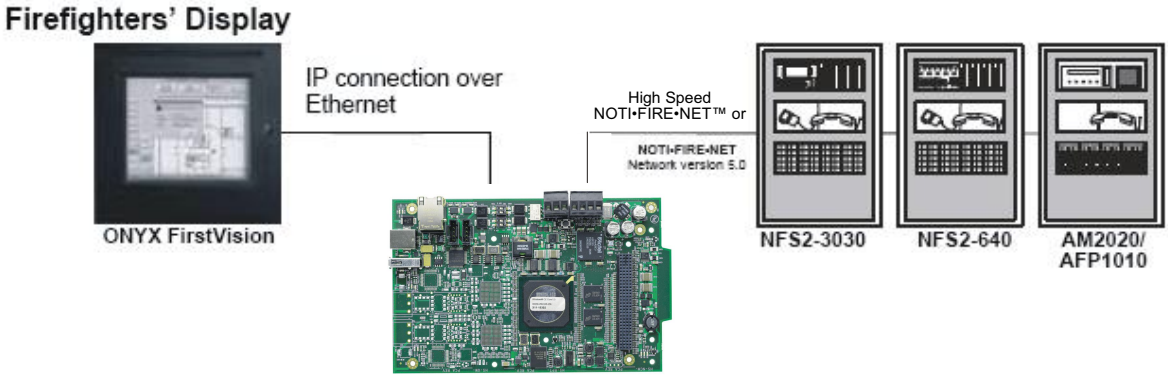

NION®, NOTIFIER®, ONYX® and ONYXWorks® are registered trademarks and NOTI•FIRE•NET™, NOTIFIY-IP™, and ONYX FirstVision™ are trademarks of Honeywell International Inc. Windows® is a registered trademark of Microsoft Corporation.
©2009 by Honeywell International Inc. All rights reserved. Unauthorized use of this document is strictly prohibited.

ISO 9001 CERTIFIED
ENGINEERING & MANUFACTURING QUALITY SYSTEMS

This document is not intended to be used for installation purposes.
We try to keep our product information up-to-date and accurate.
We cannot cover all specific applications or anticipate all requirements.
All specifications are subject to change without notice.

Made in the U.S. A.

For more information, contact Notifier. Phone: (203) 484-7161, FAX: (203) 484-7118.
www.notifier.com

BAT Series Batteries

Sealed Lead-Acid or Gell Cell

NOTIF by Honey

Reviewed for Code Compliance
Inspections Division
Approved with Conditions

Date: 05/06/15

General

BAT Series Batteries feature a new part-numbering/listing system — providing an improved method of delivery for NOTIFIER-approved sealed lead-acid batteries for all your fire alarm system needs. Multiple brands of batteries are now offered under generic part numbers, reducing backorder situations and permitting us to deliver these products in a more timely fashion. NOTIFIER has approved the multiple brands listed below as possible product shipped for a given part number. Please note that any incoming orders for "PS Series" batteries will be converted to the equivalent BAT Series part numbers.

6933cov.jpg

Features

- Provide secondary power for control panels.
- Sealed and maintenance-free.
- Overcharge protected.
- Easy handling with leakproof construction.
- Ruggedly constructed, high-impact case (ABS, polystyrene, or polypropylene, depending on models).
- Long service life.
- Compact design.

Agency Listings and Approvals

The listings and approvals below apply to BAT Series Batteries. In some cases, certain modules may not be listed by certain approval agencies, or listing may be in process. Consult factory for latest listing status.

- **UL Recognized Components**: files MH19884 *(B & B Battery),* MH20567 *(UPG, previously Jolt),* MH20845 *(Power-Sonic).*

Part Number Reference

CURRENT Part Number	BATTERY DESCRIPTION	ALTERNATES APPROVED: manufacturers and P/Ns shipped under BAT P/Ns
BAT-1250	12 V, 5 AH, sealed.	BP5-12 (B&B Battery); PS-1250 (Power-Sonic); SA1250 (Jolt) to be replaced with UB1250 (UPG).
BAT-1250	12 V, 5 AH, sealed.	BP5-12 (B&B Battery); PS-1250 (Power-Sonic); SA1250 (Jolt) to be replaced with UB1250 (UPG).
BAT-1270	12 V, 7 AH, sealed.	BP7-12 (B&B Battery); PS-1270 (Power-Sonic); SA1272 (Jolt) to be replaced with UB1270 (UPG).
BAT-12120	12 V, 12 AH, sealed.	BP12-12 (B&B Battery); PS-12120 (Power-Sonic); SA12120 (Jolt) to be replaced with UB12120 (UPG).
BAT-12180	12 V, 18 AH, sealed.	PS-12180 (Power-Sonic); SA12180 (Jolt) to be replaced with UB12180 (UPG).
BAT-12180	12 V, 18 AH, sealed.	PS-12180 (Power-Sonic); SA12180 (Jolt) to be replaced with UB12180 (UPG).
BAT-12260	12 V, 26 AH, sealed.	BP26-12 (B&B Battery); PS-12260 (Power-Sonic); SA12260 (Jolt) to be replaced with UB12260 (UPG).
BAT-12550	12 V, 55 AH, sealed.	PS-12550 (Power-Sonic); XSA12550 (Jolt) to be replaced with UB12550 (UPG).
BAT-12550	12 V, 55 AH, sealed.	PS-12550 (Power-Sonic); XSA12550 (Jolt) to be replaced with UB12550 (UPG).
BAT-121000	12 V, 100 AH, gell cell.	PS-121000 (Power-Sonic); XSA121000A (Jolt) to be replaced with UB121000 (UPG).

POWER-SONIC

Part Number Reference

Reviewed for Code Compliance
Inspections Division
Approved with Conditions

Date: 05/06/15

MODEL	Nominal Voltage V	Nominal Capacity @ 20 hr. rate A.H.	Discharge Current @20 hr. rate mA	DIMENSIONS									
				Width		Depth		Height		Height over terminal			
				in.	mm	in.	mm	in.	mm	in.	mm		
PS-1250	12	5	250	3.54	90	2.76	70	4.02	102	4.21	107	4.1	1.9
PS-1270	12	7	325	5.94	151	2.56	65	3.7	94	3.86	98	5.7	2.6
PS-12120	12	12	600	5.94	151	3.86	98	3.7	94	3.86	98	8.8	4
PS-12180	12	18	875	7.13	181	2.99	76	6.57	167	6.57	167	12.8	5.8
PS-12250	12	25	1300	6.89	175	6.54	166	4.92	125	4.92	125	18.7	8.5
PS-12550	12	55	3000	10.25	260	6.6	168	8.2	208	9.45	240	39.7	18
PS-121000	12	100	5000	12	305	6.6	168	8.2	208	9.45	240	65.7	29.8

Characteristic Discharge Curves

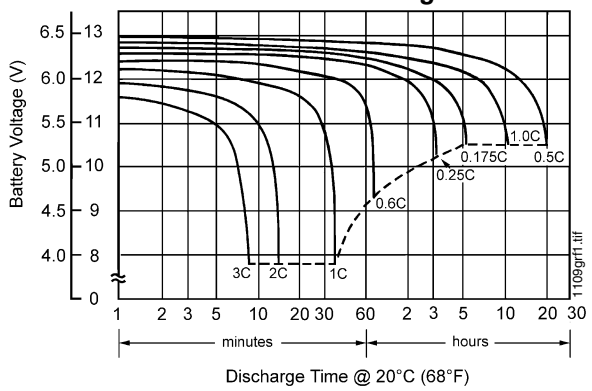

Effect of Temperature on Capacity

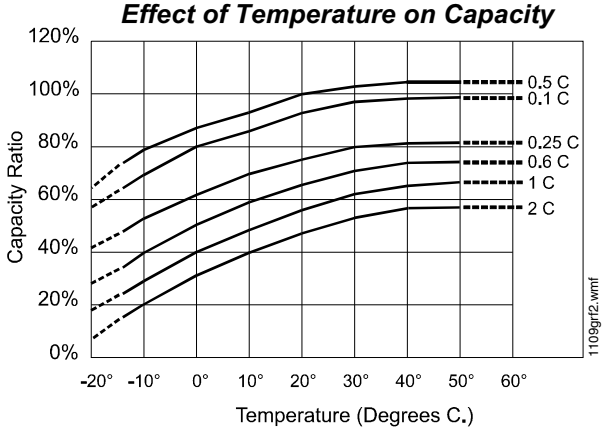

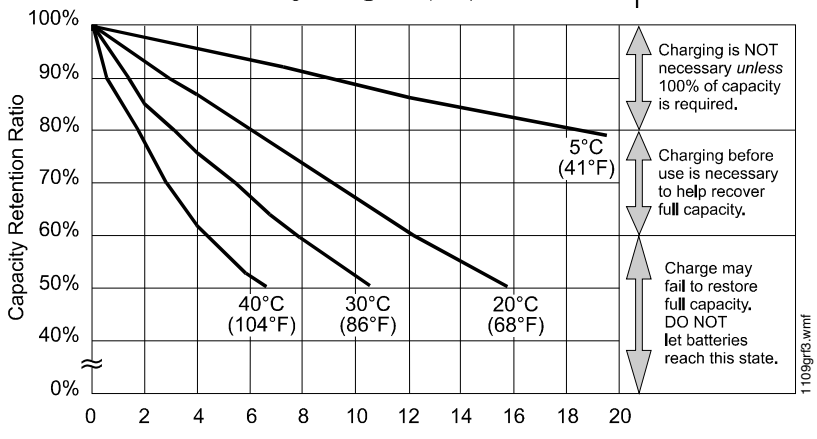

at left:
PS-121000
Shelf-Life
and Storage

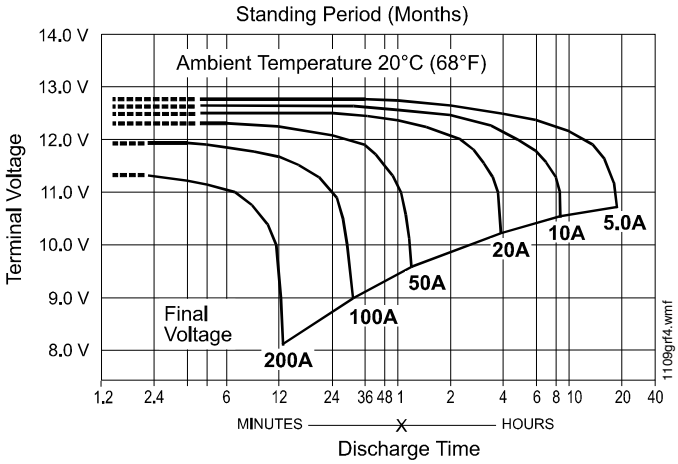

at left:
PS-1210000
Discharge
Characteristics

FSP-851(A) Series

Intelligent Plug-In Photoelectric Smoke Detectors with FlashScan®

NOTIF by Honey

Intelligent/Ad

Reviewed for Code Compliance
Inspections Division
Approved with Conditions

Date: 05/06/15

General

Notifier FSP-851(A) Series intelligent plug-in smoke detectors with integral communication provide features that surpass conventional detectors. Detector sensitivity can be programmed in the control panel software. Sensitivity is continuously monitored and reported to the panel. Point ID capability allows each detector's address to be set with rotary, decimal address switches, providing exact detector location for selective maintenance when chamber contamination reaches an unacceptable level. The FSP-851(A) photoelectric detector's unique optical sensing chamber is engineered to sense smoke produced by a wide range of combustion sources. Dual electronic thermistors add 135°F (57°C) fixed-temperature thermal sensing on the FSP-851T(A). The FSP-851R(A) is a remote test capable detector for use with DNR(A)/DNRW duct detector housings. FSP-851(A) series detectors are compatible with Notifier Onyx and CLIP series Fire Alarm Control Panels (FACPs).

FlashScan® (U.S. Patent 5,539,389) is a communication protocol developed by Notifier that greatly increases the speed of communication between analog intelligent devices. Intelligent devices communicate in a grouped fashion. If one of the devices in the group has new information, the panel's CPU stops the group poll and concentrates on single points. The net effect is response speed greater than five times that of earlier designs.

Features

- Sleek, low-profile design.
- Addressable-analog communication.
- Stable communication technique with noise immunity.
- Low standby current.
- Two-wire SLC connection.
- Compatible with FlashScan® and CLIP protocol systems.
- Rotary, decimal addressing (1-99 on CLIP systems, 1-159 on FlashScan systems).
- Optional remote, single-gang LED accessory.
- Dual LED design provides 360° viewing angle.
- Visible bi-color LEDs blink green every time the detector is addressed, and illuminate steady red on alarm *(FlashScan systems only)*.
- Remote test feature from the panel.
- Walk test with address display (an address on 121 will blink the detector LED: 12-[pause]-1*(FlashScan systems only)*.
- Built-in functional test switch activated by external magnet.
- Built-in tamper-resistant feature.
- Sealed against back pressure.
- Constructed of off-white fire-resistant plastic, designed to commercial standards, and offers an attractive appearance.
- 94-5V plastic flammability rating.
- SEMS screws for wiring of the separate base.
- Optional relay, isolator, and sounder bases.

Specifications

Sensitivity: 0.5% to 2.35% per foot obscuration

Size: 2.1" (5.3 cm) high; base determines diameter.

- **B210LP(A):** 6.1" (15.5 cm) diameter.
- **B501(A):** 4.1" (10.4 cm) diameter.
- **B200S(A):** 6.875" (17.46 cm) diameter.
- **B200SR(A):** 6.875" (17.46 cm) diameter.
- **B224RB(A):** 6.2" (15.748 cm) diameter.
- **B224BI(A):** 6.2" (15.748 cm) diameter.

B210-2951.jpg

FSP-851(A) in B210LP(A) Base

Shipping Weight: 5.2oz. (147g).

Operating Temperature range: FSP-851(A), 0°C to 49°C (32°F to 120°F). FSP-851T(A), 0°C to 38°C (32°F to 100°F). Low temperature signal for FSP-851T(A) at 45°F +/- 10°F (7.22°C +/- 5.54°C). FSP-851R(A) installed in a DNR(A)/DNRW, -20°C to 70°C (-4°F to 158°F).

UL/ULC Listed Velocity Range: 0-4000 ft/min. (1219.2 m/min.), suitable for installation in ducts.

Relative Humidity: 10%-93% noncondensing.

Thermal Ratings: Fixed-temperature setpoint 135°F (57°C).

DETECTOR SPACING AND APPLICATIONS

Notifier recommends spacing detectors in compliance with NFPA 72. In low airflow applications with smooth ceiling, space detectors 30 feet (9.144m) for ceiling heights 10 feet (3.148m) and higher. For specific information regarding detector spacing, placement, and special applications refer to NFPA 72. *System Smoke Detector Application Guide*, document A05-1003, is available at systemsensor.com

ELECTRICAL SPECIFICATIONS

Voltage Range: 15-32 volts DC peak.

Standby Current (max. avg.): 300µA @ 24VDC (one communication every five seconds with LED enabled).

LED Current (max.): 6.5mA @ 24 VDC ("ON").

Installation

FSP-851(A) plug-in detectors use a separate base to simplify installation, service, and maintenance. A special tool allows maintenance personnel to plug in and remove detectors without using a ladder.

Mount base (all base types) on an electrical backbox which is at least 1.5" (3.81 cm) deep. For a chart of compatible junction boxes, see *DN-60054.*

NOTE: *1) Because of inherent supervision provided by the SLC loop, end-of-line resistors are not required. Wiring "T-taps" or branches are permitted for Style 4 (Class "B") wiring. 2) When using relay or sounder bases, consult the ISO-X(A) installation*

sheet I56-1380 for device limitations between isolator modules and isolator bases.

Agency Listings and Approvals

These listings and approvals apply to the modules specified in this document. In some cases, certain modules or applications may not be listed by certain approval agencies, or listing may be in process. *Consult factory for latest listing status.*

- **UL Listed:** S1115.
- **ULC Listed:** S1115 (FSP-851A, FSP-851RA, FSP-851TA).
- **MEA Listed:** 225-02-E .
- **FM Approved.**
- **CSFM:** 7272-0028:0206 .
- **Maryland State Fire Marshal:** Permit # 2122 **.**
- **BSMI:** CI313066760036.
- **CCCF:** Certif. # 2004081801000017 (FSP-851T)
  Certif. # 2004081801000016 (FSP-851).
- **U.S. Coast Guard:** 161.002/42/1 (NFS-640); 161.002/50/0 (NFS2-640/NFS-320/NFS-320C, excluding B210LP(A)).
- **Lloyd's Register:** 11/600013 (NFS2-640/NFS-320/NFS-320C, excluding B210LP(A)).

Product Line Information

***NOTE:** "A" suffix indicates ULC Listed model.*

FSP-851: Low-profile intelligent photoelectric sensor. Must be mounted to one of the bases listed below.

FSP-851A: Same as FSP-851 but with ULC listing.

FSP-851T: Same as FSP-851 but includes a built-in 135°F (57°C) fixed-temperature thermal device.

FSP-851TA: Same as FSP-851T but with ULC listing.

FSP-851R: Low-profile intelligent photoelectric sensor, remote test capable. For use with DNRA/DNRW.

FSP-851RA: Same as FSP-851R but with ULC listing. For use with DNRA.

INTELLIGENT BASES

***NOTE:** "A" suffix indicates ULC Listed model.*

***NOTE:** For details on intelligent bases, see DN-60054.*

B210LP(A): Standard U.S. flanged low-profile mounting base.

B210LPBP: Bulk pack of B210LP; package contains 10.

B501(A): Standard European flangeless mounting base.

B501BP: Bulk pack of B501; package contains 10.

B200S(A): Intelligent, programmable sounder base capable of producing sound output in high or low volume with ANSI Temporal 3, ANSI Temporal 4, continuous tone, marching tone, and custom tone.

B200SR(A): Intelligent sounder base capable of producing sound output with ANSI Temporal 3 or continuous tone. Replaces B501BH series bases in retrofit applications.

B224RB(A): Plug-in System Sensor **relay** base. Screw terminals: up to 14 AWG (2.0 mm²). Relay type: Form-C. Rating: 2.0 A @ 30 VDC resistive; 0.3 A @ 110 VDC inductive; 1.0 A @ 30 VDC inductive.

B224BI(A): Plug-in System Sensor ***isolator*** detector base. Maximum 25 devices between isolator bases .

ACCESSORIES

F110: Retrofit flange to convert B2
B710LP(A) profile, or to convert older h
profile.

F110BP: Bulk pack of F110; package c

F210: Replacement flange for B210LP(

RA100Z(A): Remote LED annunciator.
U.S. single-gang electrical box. For
B210LP(A) bases only.

SMB600: Surface mounting kit

M02-04-00: Test magnet.

M02-09-00: Test magnet with telescoping handle.

XR2B: Detector removal tool. Allows installation and/or removal of detector heads from bases in high ceiling applications.

XP-4: Extension pole for XR2B. Comes in three 5-foot (1.524 m) sections.

T55-127-010: Detector removal tool without pole.

BCK-200B: Black detector covers for use with FSP-851(A) only; box of 10.

WCK-200B: White detector covers for use with FSP-851(A) only; box of 10.

Reviewed for Code Compliance
Inspections Division
Approved with Conditions

Date: 05/06/15

-Notifier® and FlashScan® are registered trademarks of Honeywell International Inc.
©2011 by Honeywell International Inc. All rights reserved. Unauthorized use of this document is strictly prohibited.

ISO 9001 CERTIFIED ENGINEERING & MANUFACTURING QUALITY SYSTEMS

This document is not intended to be used for installation purposes.
We try to keep our product information up-to-date and accurate.
We cannot cover all specific applications or anticipate all requirements.
All specifications are subject to change without notice.

Made in the U.S. A.

For more information, contact Notifier. Phone: (203) 484-7161, FAX: (203) 484-7118.
www.notifier.com

FST-851(A) Series

Intelligent Thermal (Heat) Detectors with FlashScan®

NOTIF by Honey

Intelligent / Ad

Reviewed for Code Compliance
Inspections Division
Approved with Conditions

Date: 05/06/15

General

Notifier FST-851(A) Series intelligent plug-in thermal detectors with integral communication has features that surpass conventional detectors. Point ID capability allows each detector's address to be set with rotary, decimal address switches, providing exact detector locations. FST-851(A) Series thermal detectors use an innovative thermistor sensing circuit to produce 135°F/57°C fixed-temperature (FST-851/A) and rate-of-rise thermal detection (FST-851R/A) in a low-profile package. FST-851H(A) provides fixed high-temperature detection at 190°F/88°C. These thermal detectors provide effective, intelligent property protection in a variety of applications. FST-851(A) Series detectors are compatible with Notifier Onyx and CLIP series Fire Alarm Control Panels (FACPs).

FlashScan® (U.S. Patent 5,539,389) is a communication protocol developed by Notifier Engineering that greatly enhances the speed of communication between analog intelligent devices and certain NOTIFIER systems. Intelligent devices communicate in a grouped fashion. If one of the devices within the group has new information, the panel's CPU stops the group poll and concentrates on single points. The net effect is response speed greater than five times that of earlier designs.

Features

- Sleek, low-profile, stylish design.
- State-of-the-art thermistor technology for fast response.
- Rate-of-rise model (FST-851R/A), 15°F (8.3°C) per minute.
- Factory preset fixed temperature at 135°F (57°C); high-temperature model fixed at 190°F (88°C).
- Addressable by device.
- Compatible with FlashScan® and CLIP protocol systems.
- Rotary, decimal addressing (1-99 on CLIP systems, 1-159 on FlashScan systems).
- Two-wire SLC connection.
- Visible LEDs "blink" every time the unit is addressed.
- 360°-field viewing angle of the visual alarm indicators (two bi-color LEDs). LEDs blink green in Normal condition and turn on steady red in Alarm.
- Integral communications and built-in device-type identification.
- Remote test feature from the panel.
- Built-in functional test switch activated by external magnet.
- Walk test with address display (an address of 121 will blink the detector LED 12-(pause)-1).
- Low standby current.
- Backward-compatible.
- Built-in tamper-resistant feature.
- Designed for direct-surface or electrical-box mounting.
- Sealed against back pressure.
- Plugs into separate base for ease of installation and maintenance. Separate base allows interchange of photoelectric, ionization and thermal sensors.
- SEMS screws for wiring of the separate base.
- Constructed of off-white fire-resistant plastic, designed to commercial standards, and offers an attractive appearance.

B210-2251.jpg

FST-851(A) in B210LP(A) Base

- 94-5V plastic flammability rating.
- Remote LED output connection to optional RA100Z(A) remote LED annunciator.
- Optional sounder, relay, and isolator bases.
- Optional flanced surface mounting kit.

Specifications

Size: 2.1" (5.3 cm) high; base determines diameter.

- **B210LP(A):** 6.1" (15.5 cm) diameter.
- **B501(A):** 4.1" (10.4 cm) diameter.
- **B200S(A):** 6.875" (17.46 cm) diameter.
- **B200SR(A):** 6.875" (17.46 cm) diameter.
- **B224RB(A):** 6.2" (15.748 cm) diameter.
- **B224BI(A):** 6.2" (15.748 cm) diameter.

Shipping weight: 4.8 oz. (137 g).

Operating temperature range: FST-851(A) Series, FST-851R(A): –20°C to 38°C (–4°F to 100°F); FST-851H(A): –20°C to 66°C (–4°F to 150°F).

Detector spacing: UL approved for 50 ft. (15.24 m) center to center. FM approved for 25 x 25 ft. (7.62 x 7.62 m) spacing.

Relative humidity: 10% – 93% noncondensing.

Thermal ratings: fixed-temperature setpoint 135°F (57°C), rate-of-rise detection 15°F (8.3°C) per minute, high temperature heat 190°F (88°C).

ELECTRICAL SPECIFICATIONS

Voltage range: 15 - 32 volts DC peak.

Standby current (max. avg.): 300 µA @ 24 VDC (one communication every 5 seconds with LED enabled).

LED current (max.): 6.5 mA @ 24 VDC ("ON").

Applications

Use thermal detectors for protection of property. For further information, go to systemsensor.com for manual I56-407-00, Applications Manual for System Smoke Detectors, which provides detailed information on detector spacing, placement, zoning, wiring, and special applications.

Installation

The FST Series plug-in intelligent thermal detectors use a separate base to simplify installation, service, and maintenance. Installation instructions are shipped with each detector. A special tool allows maintenance personnel to plug in and remove detectors without using a ladder

Mount base (all base types) on an electrical backbox which is at least 1.5" (3.81 cm) deep. For a chart of compatible junction boxes, see *DN-60054*.

NOTE: 1) *Because of the inherent supervision provided by the SLC loop, end-of-line resistors are not required. Wiring "T-taps" or branches are permitted for Style 4 (Class "B") wiring.* ***2)*** *When using relay or sounder bases, consult the ISO-X(A) installation sheet I56-1380 for device limitations between isolator modules and isolator bases.*

Agency Listings and Approvals

These listings and approvals apply to the modules specified in this document.In some cases, certain modules or applications may not be listed by certain approval agencies, or listing may be in process. *Consult factory for latest listing status.*

- **UL Listed:** S747.
- **ULC Listed:** S6978.
- **MEA Listed:** 383-02-E.
- **FM Approved.**
- **CSFM:** 7270-0028:0196.
- **BSMI:** CI313066760025.
- **CCCF:** Certif. # 2004081801000018.
- **U.S. Coast Guard:** 161.002/42/1 (NFS-640); 161.002/50/0 (NFS2-640/NFS-320/NFS-320C, excluding B210LP(A)).
- **Lloyd's Register:** 11/600013 (NFS2-640/NFS-320/NFS-320C, excluding B210LP(A)).

Product Line Information

NOTE: *"A" suffix indicates ULC Listed model.*

FST-851: Intelligent thermal detector. Must be mounted to one of the bases listed below.

FST-851A: Same as FST-851 but with ULC Listing.

FST-851R: Intelligent thermal detector with rate-of-rise feature.

FST-851RA: Same as FST-851R but with ULC Listing.

FST-851H: Intelligent high-temperature thermal detector.

FST-851HA: Same as FST-851H but with ULC Listing.

INTELLIGENT BASES

NOTE: *"A" suffix indicates ULC Listed model.*

NOTE: *For details about intelligent bases and their mounting, see DN-60054.*

B210LP(A): Standard U.S. flanged low-profile mounting base.

B210LPBP: Bulk pack of B210LP; package contains 10.

B501(A): Standard European flangeless mounting base.

B501BP: Bulk pack of B501; package contains 10.

B200S(A): Addressable Intelligent, programmable sounder base capable of producing sound output in high or low volume with ANSI Temporal 3, ANSI Tempo marching tone, and custom tone.

B200SR(A): Intelligent sounder base sound output with ANSI Temporal Replaces B501BH series bases in retr

B224RB(A): Intelligent relay base. Sc AWG (2.0 mm²). Relay type: Form-C. F resistive; 0.3 A @ 110 VDC inductive; tive.

B224BI(A): Intelligent isolator base. Isolates SLC from loop shorts. Maximum: 25 devices between isolator bases; see Note 2 under Installation.

ACCESSORIES

F110: Retrofit flange to convert B210LP(A) to match the B710LP(A) profile, or to convert older high-profile bases to low-profile.

F110BP: Bulk pack of F110; package contains 15.

F210: Replacement flange for B210LP(A) base.

RA100Z(A): Remote LED annunciator. 3 – 32 VDC. Fits U.S. single-gang electrical box. Supported by B210LP(A) and B501(A) bases only.

SMB600: Surface mounting kit, flanged.

M02-04-00: Test magnet.

M02-09-00: Test magnet with telescoping handle.

XR2B: Detector removal tool. Allows installation and/or removal of FlashScan® Series detector heads from base in high ceiling installations. Includes T55-127-010.

T55-127-010: Detector removal tool without pole.

XP-4: Extension pole for XR2B. Comes in three 5-foot (1.524 m) sections.

RESURGAM CITY OF PORTLAND, MAINE

Reviewed for Code Compliance
Inspections Division
Approved with Conditions

Date: 05/06/15

Notifier® and FlashScan® are registered trademarks of Honeywell International Inc.
©2011 by Honeywell International Inc. All rights reserved. Unauthorized use of this document is strictly prohibited.

ISO 9001 CERTIFIED ENGINEERING & MANUFACTURING QUALITY SYSTEMS

This document is not intended to be used for installation purposes.
We try to keep our product information up-to-date and accurate.
We cannot cover all specific applications or anticipate all requirements.
All specifications are subject to change without notice.

Made in the U.S. A.

For more information, contact Notifier. Phone: (203) 484-7161, FAX: (203) 484-7118.
www.notifier.com

Intelligent Bases

B501(A), B200S(A), B200SR(A), B210LP(A), B2241BI(A), B224RB(A), Mounting Kits, and Accessories

NOTIF by Honey

Intelligent/Ad

Reviewed for Code Compliance
Inspections Division
Approved with Conditions

Date: 05/06/15

General

Intelligent FlashScan® and CLIP mounting bases and kits provide a variety of ways to install NOTIFIER detectors in any application. Intelligent detectors can be mounted in either flanged or flangeless bases depending on junction box selection *(see Junction Box Selection Guide)*. Across this product line, detectors plug in easily to the base with SEMS screws; and models employ various 12 to 24 AWG wire ranges.

Relay, isolator, and sounder bases can be used to meet local code requirements. Relay bases provide one Form-C contact relay for control of auxiliary functions such as door closure and elevator recall. Isolator bases allow loops to continue to operate under fault conditions and automatically restore when the fault is removed. Sounder bases are available in temporal and non-temporal pattern versions depending on whether the signal is to be used for evacuation purposes.

60054b5.jpg

Flangeless Mounting Base B501(A)

60054LP.jpg

Flanged Mounting Base B210LP(A)

60054sr.jpg

Sounder Base B200S(A), B200SR(A), B200SCOA

60054rb.jpg

Relay Base B224RB(A)

Specifications

Diameter:

- B501: 4.1" (104 mm).
- B224BI, B224RB, B210LP: 6.1" (155 mm).
- B200S/SR/SCOA: 6.875" (17.46 cm).

Wire gauge:

- B224BI, B224RB: 14 to 24 AWG.
- B210LP, B501, B200S/SR/SCOA: 12 to 24 AWG.

Temperature range:

- B224BI, B224RB, B200S/SR/SCOA: 32°F to 120°F (0°C to 49°C).
- B210LP, B501: -4°F to 150°F (-20°C to 66°C).

Humidity range: 10% to 93% RH, non-condensing.

System temperature and humidity ranges: This system meets NFPA requirements for operation at 0°C to 49°C (32°F to 120°F); and at a relative humidity (noncondensing) of 85% at 30°C (86°F) per NFPA, and 93% ± 2% at 32°C ± 2°C (89.6°F ± 1.1°F) per ULC. However, the useful life of the system's standby batteries and the electronic components may be adversely affected by extreme temperature ranges and humidity. Therefore, it is recommended that this system and all peripherals be installed in an environment with a nominal room temperature of 15°C to 27°C (60°F to 80°F).

Electrical Ratings

FOR B200S/SR/SCOA:

External supply voltage: 16 to 33 VDC (VFWR)

Standby current: 500 µA maximum.

Alarm current:

- B200S: 35 mA maximum at high-volume setting; 15 mA maximum at low-volume setting.
- B200SR: 35 mA maximum.
- B200SCOA: 40mA Max. (DC), 70mA Max. (FWR)

SLC operating voltage: 15 to 32 VDC.

SLC standby current: 300 µA.

Sound output:

- B200S, high-volume*: Greater than 85 dBA minimum.
- B200S, low-volume*: Greater than 75 dBA minimum.
- B200SR*: Greater than 85 dBA minimum.
- B200SCOA, high-volume**: Greater than 87 dBA minimum.
- B200SCOA, low-volume**: Greater than 85 dBA minimum

**Measured in a UL reverberant room at 10 feet, 24 Volts (continuous tone)*
***Measured in a ULC anechoic room at 10 feet, 24 Volts continuous tone)*

FOR B224RB, B224BI:

Operating voltage: 15 to 32 VDC (powered by SLC).

Standby ratings: <500 µA maximum @ 24 VDC.

Set time (B224RB only): short delay 55 to 90 msec; long delay 6 to 9 seconds.

Reset time (B224RB only): 20 msec maximum.

Relay characteristics (B224RB only): two-coil latching relay; one Form-C contact; ratings (UL/CSA): 0.9 A @ 125 VAC, 0.9 A @ 110 VDC, and 3.0 A @ 30 VDC.

Product Line Information

INTELLIGENT BASES

B501: Flangeless mounting base.

B501A: Flangeless mounting base, ULC Listed.

B501BP: Bulk pack of B501 (10).

B210LP: Flanged mounting base.

B210LPA: Flanged mounting base, ULC listed

B210LPBP: Bulk pack of B210LP (10).

B200S: Intelligent addressable sounder base capable of producing sound output in high or low volume with ANSI Temporal 3, ANSI Temporal 4, continuous tone, marching tone, and custom tone. Uses FlashScan protocol. Only compatible with the NFS-320, NFS2-640 and NFS2-3030 operating version with version 15.0 or higher panel firmware.

B200SA: Same as B200S with ULC-listing.

B200SCOA: Same as B200S with ULC-listing and CO detector markings in English/French (required in Canada for ULC applications with FCO-851A).

B200SR: Intelligent sounder base capable of producing sound output with ANSI Temporal 3 or continuous tone.

B200SRA: Same as B200SR with ULC-listing.

B224RB: Relay base.

B224RBA: Relay base, ULC Listed.

B224BI: Isolator base.

B224BIA: Isolator base, ULC Listed.

MOUNTING KITS AND ACCESSORIES

SMB600: Surface mounting kit, flanged.

F110: Retrofit flange for converting high-profile bases to low-profile.

F110BP: Bulk pack of F110 (10).

F210: Accessory flange ring for B210LP(A) base (new design). 6-inch diameter.

F210BP: Bulk pack of F210 (10).

RA100Z: Remote LED annunciator.

RA100ZA: Remote LED annunciator, ULC Listed.

M02-04-00: Detector test magnet.

M02-09-00: Test magnet with telescopi

XR2B: Detector removal tool for curre *included).*

XR2: Detector Remove Tool for use v heads, and FSL-751.

XP-4: Extension pole for XR2/B *(5 to 1*

T55-127-010: Detector removal head.

BCK-200B: Black detector kit, packa photo and ion detectors).

WCK-200B: White detector kit, package of 10 (for use with photo and ion detectors).

Reviewed for Code Compliance
Inspections Division
Approved with Conditions
Date: 05/06/15

Agency Listings and Approvals

The listings and approvals below apply to intelligent bases as noted. In some cases, certain modules or applications may not be listed by certain approval agencies, or listing may be in process. Consult factory for latest listing status.

- **UL Listed:** S911
- **ULC Listed:** S911
- **FM Approved**
- **MEA:** 22-95-E, 205-94-E Vol. 2; 257-06-E
- **CSFM:** 7300-1653:0126, 7135-1653:0213, 7300-1653:0109

Junction Box Selection Guide

Base Models	Single Gang	3.5" Oct.	4.0" Oct.	4.0" Sq.	4.0" Sq. with 3.0" mud ring	50 mm	60 mm	70 mm	75 mm
B200S, B200SR, B200SCOA	Yes	Yes	Yes	Yes	Yes	No	No	No	No
B501	No	Yes	No	No	Yes	Yes	Yes	Yes	No
B210LP	Yes	Yes	Yes	Yes	Yes	No	No	No	No
B224RB	No	Yes	Yes	Yes	No	No	Yes	Yes	Yes
B224BI	No	Yes	Yes	Yes	No	No	No	Yes	Yes

NOTE: *Box depth contingent on base and wire size.*
Refer to National Electric Code or applicable local codes for appropriate recommendations.

FlashScan®, **NOTIFIER®** and **System Sensor®** are registered trademarks of Honeywell International Inc.
©2013 by Honeywell International Inc. All rights reserved. Unauthorized use of this document is strictly prohibited.

ISO 9001 CERTIFIED
ENGINEERING & MANUFACTURING QUALITY SYSTEMS

This document is not intended to be used for installation purposes.
We try to keep our product information up-to-date and accurate.
We cannot cover all specific applications or anticipate all requirements.
All specifications are subject to change without notice.

Made in the U.S. A.

For more information, contact Notifier. Phone: (203) 484-7161, FAX: (203) 484-7118.
www.notifier.com

NBG-12LX

Addressable Manual Pull Station

NOTIF
by Honey

Intelligent/Ad

Reviewed for Code Compliance
Inspections Division
Approved with Conditions

Date: 05/06/15

General

The Notifier NBG-12LX is a state-of-the-art, dual-action (i.e., requires two motions to activate the station) pull station that includes an addressable interface for any Notifier intelligent control panel except FireWarden series panels, and the NSP-25 panel. Because the NBG-12LX is addressable, the control panel can display the exact location of the activated manual station. This leads fire personnel quickly to the location of the alarm.

Features

- Maintenance personnel can open station for inspection and address setting without causing an alarm condition.
- Built-in bicolor LED, which is visible through the handle of the station, flashes in normal operation and latches steady red when in alarm.
- Handle latches in down position and the word “ACTIVATED” appears to clearly indicate the station has been operated.
- Captive screw terminals wire-ready for easy connection to SLC loop (accepts up to 12 AWG/3.25 mm² wire).
- Can be surface mounted (with SB-10 or SB-I/O) or semi-flush mounted. Semi-flush mount to a standard single-gang, double-gang, or 4" (10.16 cm) square electrical box.
- Smooth dual-action design.
- Meets ADAAG controls and operating mechanisms guidelines (Section 4.1.3[13]); meets ADA requirement for 5 lb. maximum activation force.
- Highly visible.
- Attractive shape and textured finish.
- Key reset.
- Includes Braille text on station handle.
- Optional trim ring (BG12TR).
- Meets UL 38, Standard for Manually Actuated Signaling Boxes.
- Up to 99 NBG-12LX stations per loop on CLIP protocol loops.
- Up to 159 NBG-12LX stations per loop on FlashScan® protocol loops.
- Dual-color LED blinks green to indicate normal on FlashScan® systems.

Construction

Shell, door, and handle are molded of durable polycarbonate material with a textured finish.

Specifications

- **Shipping Weight:** 9.6 oz. (272.15 g)
- **Normal operating voltage:** 24 VDC.
- **Maximum SLC loop voltage:** 28.0 VDC.
- **Maximum SLC standby current:** 375 µA.
- **Maximum SLC alarm current:** 5 mA.
- **Temperature Range:** 32°F to 120°F (0°C to 49°C)
- **Relative Humidity:** 10% to 93% (noncondensing)
- **For use indoors in a dry location**

The NBG-12LX
Addressable Manual Pull Station

Installation

The NBG-12LX will mount semi-flush into a single-gang, double-gang, or standard 4" (10.16 cm) square electrical outlet box, or will surface mount to the model SB-10 or SB-I/O surface backbox. If the NBG-12LX is being semi-flush mounted, then the optional trim ring (BG12TR) may be used. The BG12TR is usually needed for semi-flush mounting with 4" (10.16 cm) or double-gang boxes (not with single-gang boxes).

Operation

Pushing in, then pulling down on the handle causes it to latch in the down/activated position. Once latched, the word “ACTIVATED” (in bright yellow) appears at the top of the handle, while a portion of the handle protrudes from the bottom of the station. To reset the station, simply unlock the station with the key and pull the door open. This action resets the handle; closing the door automatically resets the switch.

Each manual station, on command from the control panel, sends data to the panel representing the state of the manual switch. Two rotary decimal switches allow address settings (1 – 159 on FlashScan® systems, 1 – 99 on CLIP systems).

Architectural/Engineering Specifications

Manual Fire Alarm Stations shall be non-coded, with a key-operated reset lock in order that they may be tested, and so designed that after actual Emergency Operation, they cannot be restored to normal except by use of a key. An operated station shall automatically condition itself so as to be visually detected as activated. Manual stations shall be constructed of red-colored polycarbonate material with clearly visible operating instructions provided on the cover. The word FIRE shall appear on the front of the stations in white letters, 1.00 inches (2.54 cm) or larger. Stations shall be suitable for surface mounting on matching backbox SB-10 or SB-I/O; or semi-flush mounting on a standard single-gang, double-gang, or

4" (10.16 cm) square electrical box, and shall be installed within the limits defined by the Americans with Disabilities Act (ADA) or per national/local requirements. Manual Stations shall be Underwriters Laboratories listed.

Manual stations shall connect with two wires to one of the control panel SLC loops. The manual station shall, on command from the control panel, send data to the panel representing the state of the manual switch. Manual stations shall provide address setting by use of rotary decimal switches.

The loop poll LED shall be clearly visible through the front of the station. The LED shall flash while in the normal condition, and stay steadily illuminated when in alarm.

Product Line Information

NBG-12LX: Dual-action addressable pull station. Includes key locking feature. (Listed for Canadian and non-Canadian applications.)

NBG-12LXSP: Spanish/English labelled version.

NBG-12LXP: Portuguese labelled version.

SB-10: Surface backbox; metal.

SB-I/O: Surface backbox; plastic.

BG12TR: Optional trim ring.

17021: Keys, set of two.

NY-Plate: New York City trim plate.

Agency Listings and Approvals

In some cases, certain modules or applications may not be listed by certain approval agencies, or listing may be in process. Consult factory for latest listing status.

- **UL/ULC Listed:** S692 (listed for Canadian and non-Canadian applications).
- **MEA:** 67-02-E.
- **CSFM:** 7150-0028:0199.
- **FDNY:** COA #6085 (NFS2-640), COA #6098 (NFS2-3030).
- **BSMI:** CI313066760047.
- **U.S. Coast Guard.**
- **Lloyd's Register.**
- **FM Approved.**

Patented: U.S. Patent No. D428,351; 6,380,846; 6,314,772; 6,632,108.

Reviewed for Code Compliance
Inspections Division
Approved with Conditions

Date: 05/06/15

NOTIFIER® and FlashScan® are registered trademarks of Honeywell International Inc.
©2012 by Honeywell International Inc. All rights reserved. Unauthorized use of this document is strictly prohibited.

ISO 9001 CERTIFIED
ENGINEERING & MANUFACTURING QUALITY SYSTEMS

This document is not intended to be used for installation purposes.
We try to keep our product information up-to-date and accurate.
We cannot cover all specific applications or anticipate all requirements.
All specifications are subject to change without notice.

Made in the U.S. A.

For more information, contact Notifier. Phone: (203) 484-7161, FAX: (203) 484-7118.
www.notifier.com

FMM-1(A), FMM-101(A), FZM-1(A) & FDM-1(A)

Monitor Modules with FlashScan®

NOTIF by Honey

Intelligent/Ad

Reviewed for Code Compliance
Inspections Division
Approved with Conditions

Date: 05/06/15

General

Four different monitor modules are available for Notifier's intelligent control panels for a variety of applications. Monitor modules supervise a circuit of dry-contact input devices, such as conventional heat detectors and pull stations, or monitor and power a circuit of two-wire smoke detectors (FZM-1(A)).

FMM-1(A) is a standard-sized module (typically mounts to a 4" [10.16 cm] square box) that supervises either a Style D (Class A) or Style B (Class B) circuit of dry-contact input devices.

FMM-101(A) is a miniature monitor module a mere 1.3" (3.302 cm) H x 2.75" (6.985 cm) W x 0.5" (1.270 cm) D that supervises a Style B (Class B) circuit of dry-contact input devices. Its compact design allows the FMM-101(A) to be mounted in a single-gang box behind the device it monitors.

FZM-1(A) is a standard-sized module that monitors and supervises compatible two-wire, 24 volt, smoke detectors on a Style D (Class A) or Style B (Class B) circuit.

FDM-1(A) is a standard-sized dual monitor module that monitors and supervises two independent two-wire Style B (Class B) dry-contact initiating device circuits (IDCs) at two separate, consecutive addresses in intelligent, two-wire systems.

FlashScan® (U.S. Patent 5,539,389) is a communication protocol developed by NOTIFIER that greatly increases the speed of communication between analog intelligent devices. Intelligent devices communicate in a grouped fashion. If one of the devices within the group has new information, the panel CPU stops the group poll and concentrates on single points. The net effect is response speed greater than five times that of other designs.

FMM-1(A) Monitor Module

- Built-in type identification automatically identifies this device as a monitor module to the control panel.
- Powered directly by two-wire SLC loop. No additional power required.
- High noise (EMF/RFI) immunity.
- SEMS screws with clamping plates for ease of wiring.
- Direct-dial entry of address: 01 – 159 on FlashScan loops; 01 – 99 on CLIP loops.
- LED flashes green during normal operation (this is a programmable option) and latches on steady red to indicate alarm.

The FMM-1(A) Monitor Module is intended for use in intelligent, two-wire systems, where the individual address of each module is selected using the built-in rotary switches. It provides either a two-wire or four-wire fault-tolerant Initiating Device Circuit (IDC) for normally-open-contact fire alarm and supervisory devices. The module has a panel-controlled LED indicator. The FMM-1(A) can be used to replace MMX-1(A) modules in existing systems.

FMM-1(A) APPLICATIONS

Use to monitor a zone of four-wire smoke detectors, manual fire alarm pull stations, waterflow devices, or other normally-open dry-contact alarm activation devices. May also be used to monitor normally-open supervisory devices with special supervisory indication at the control panel. Monitored circuit may be wired as an NFPA Style B (Class B) or Style D (Class A) Initiating Device Circuit. A 47K ohm End-of-Line Resistor (provided) terminates the Style B circuit. No resistor is required for supervision of the Style D circuit.

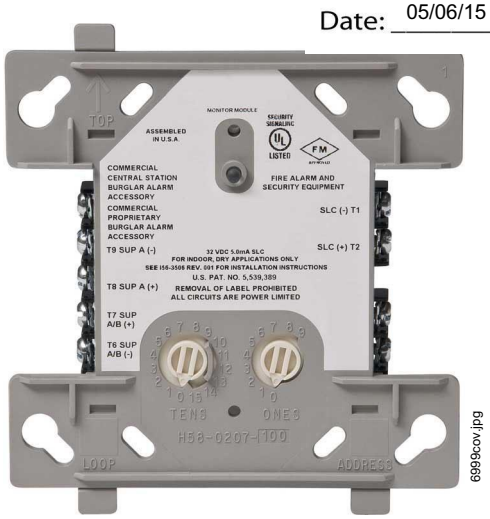

bgf.x0396699.jpg

FMM-1(A) (Type H)

FMM-1(A) OPERATION

Each FMM-1(A) uses one of the available module addresses on an SLC loop. It responds to regular polls from the control panel and reports its type and the status (open/normal/short) of its Initiating Device Circuit (IDC). A flashing LED indicates that the module is in communication with the control panel. The LED latches steady on alarm (subject to current limitations on the loop).

FMM-1(A) SPECIFICATIONS

Nominal operating voltage: 15 to 32 VDC.

Maximum current draw: 5.0 mA (LED on).

Average operating current: 350 µA (LED flashing), 1 communication every 5 seconds, 47k EOL.

Maximum IDC wiring resistance: 40 ohms.

EOL resistance: 47K ohms.

Temperature range: 32°F to 120°F (0°C to 49°C).

Humidity range: 10% to 93% noncondensing.

Dimensions: 4.5" (11.43 cm) high x 4" (10.16 cm) wide x 1.25" (3.175 cm) deep. Mounts to a 4" (10.16 cm) square x 2.125" (5.398 cm) deep box.

FMM-101(A) Mini Monitor Module

- Built-in type identification automatically identifies this device as a monitor module to the panel.
- Powered directly by two-wire SLC loop. No additional power required.
- High noise (EMF/RFI) immunity.
- Tinned, stripped leads for ease of wiring.
- Direct-dial entry of address: 01 – 159 on FlashScan loops; 01 – 99 on CLIP loops.

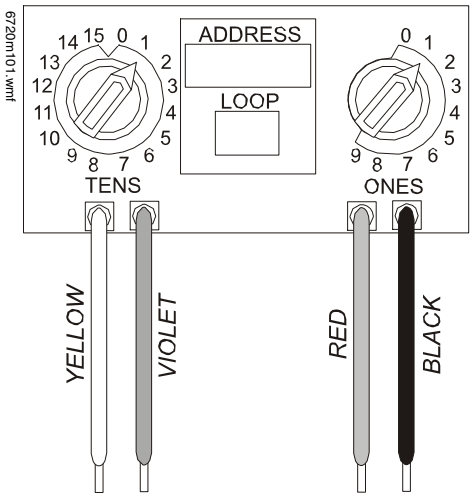

The FMM-101(A) Mini Monitor Module can be installed in a single-gang junction directly behind the monitored unit. Its small size and light weight allow it to be installed without rigid mounting. The FMM-101(A) is intended for use in intelligent, two-wire systems where the individual address of each module is selected using rotary switches. It provides a two-wire initiating device circuit for normally-open-contact fire alarm and security devices. The FMM-101(A) can be used to replace MMX-101(A) modules in existing systems.

FMM-101(A) APPLICATIONS

Use to monitor a single device or a zone of four-wire smoke detectors, manual fire alarm pull stations, waterflow devices, or other normally-open dry-contact devices. May also be used to monitor normally-open supervisory devices with special supervisory indication at the control panel. Monitored circuit/device is wired as an NFPA Style B (Class B) Initiating Device Circuit. A 47K ohm End-of-Line Resistor (provided) terminates the circuit.

FMM-101(A) OPERATION

Each FMM-101(A) uses one of the available module addresses on an SLC loop. It responds to regular polls from the control panel and reports its type and the status (open/normal/short) of its Initiating Device Circuit (IDC).

FMM-101(A) SPECIFICATIONS

Nominal operating voltage: 15 to 32 VDC.

Average operating current: 350 µA, 1 communication every 5 seconds, 47k EOL; 600 µA Max. (Communicating, IDC Shorted).

Maximum IDC wiring resistance: 40 ohms.

Maximum IDC Voltage: 11 Volts.

Maximum IDC Current: 400 µA.

EOL resistance: 47K ohms.

Temperature range: 32°F to 120°F (0°C to 49°C).

Humidity range: 10% to 93% noncondensing.

Dimensions: 1.3" (3.302 cm) high x 2
0.65" (1.651 cm) deep.

Wire length: 6" (15.24 cm) minimum.

RESURGAM CITY OF PORTLAND, MAINE
Reviewed for Code Compliance
Inspections Division
Approved with Conditions
Date: 05/06/15

FZM-1(A) Interface Modu

- Supports compatible two-wire smok
- Supervises IDC wiring and conne
source.
- High noise (EMF/RFI) immunity.
- SEMS screws with clamping plates for ease of wiring.
- Direct-dial entry of address: 01 – 159 on FlashScan loops, 01 – 99 on CLIP loops.
- LED flashes during normal operation; this is a programmable option.
- LED latches steady to indicate alarm on command from control panel.

The FZM-1(A) Interface Module is intended for use in intelligent, addressable systems, where the individual address of each module is selected using built-in rotary switches. This module allows intelligent panels to interface and monitor two-wire conventional smoke detectors. It transmits the status (normal, open, or alarm) of one full zone of conventional detectors back to the control panel. All two-wire detectors being monitored must be UL compatible with the module. The FZM-1(A) can be used to replace MMX-2(A) modules in existing systems.

FZM-1(A) APPLICATIONS

Use the FZM-1(A) to monitor a zone of two-wire smoke detectors. The monitored circuit may be wired as an NFPA Style B (Class B) or Style D (Class A) Initiating Device Circuit. A 3.9 K ohm End-of-Line Resistor (provided) terminates the end of the Style B or D (class B or A) circuit (maximum IDC loop resistance is 25 ohms). Install ELR across terminals 8 and 9 for Style D application.

FZM-1(A) OPERATION

Each FZM-1(A) uses one of the available module addresses on an SLC loop. It responds to regular polls from the control panel and reports its type and the status (open/normal/short) of its Initiating Device Circuit (IDC). A flashing LED indicates that the module is in communication with the control panel. The LED latches steady on alarm (subject to current limitations on the loop).

FZM-1(A) SPECIFICATIONS

Nominal operating voltage: 15 to 32 VDC.

Maximum current draw: 5.1 mA (LED on).

Maximum IDC wiring resistance: 25 ohms.

Average operating current: 300 µA, 1 communication and 1 LED flash every 5 seconds, 3.9k eol.

EOL resistance: 3.9K ohms.

External supply voltage (between Terminals T3 and T4): DC voltage: 24 volts power limited. Ripple voltage: 0.1 Vrms maximum. Current: 90 mA per module maximum.

Temperature range: 32°F to 120°F (0°C to 49°C).

Humidity range: 10% to 93% noncondensing.

Dimensions: 4.5" (11.43 cm) high x 4" (10.16 cm) wide x 1.25" (3.175 cm) deep. Mounts to a 4" (10.16 cm) square x 2.125" (5.398 cm) deep box.

FDM1(A) Dual Monitor Module

The FDM-1(A) Dual Monitor Module is intended for use in intelligent, two-wire systems. It provides two independent two-wire initiating device circuits (IDCs) at two separate, consecutive addresses. It is capable of monitoring normally open contact fire alarm and supervisory devices; or either normally open or normally closed security devices. The module has a single panel-controlled LED.

NOTE: *The FDM-1(A) provides two Style B (Class B) IDC circuits ONLY. Style D (Class A) IDC circuits are NOT supported in any application.*

FDM-1(A) SPECIFICATIONS

Normal operating voltage range: 15 to 32 VDC.

Maximum current draw: 6.4 mA (LED on).

Average operating current: 750 µA (LED flashing).

Maximum IDC wiring resistance: 1,500 ohms.

Maximum IDC Voltage: 11 Volts.

Maximum IDC Current: 240 µA

EOL resistance: 47K ohms.

Maximum SLC Wiring resistance: 40 Ohms.

Temperature range: 32° to 120°F (0° to 49°C).

Humidity range: 10% to 93% (non-condensing).

Dimensions: 4.5" (11.43 cm) high x 4" (10.16 cm) wide x 2.125" (5.398 cm) deep.

FDM-1(A) AUTOMATIC ADDRESSING

The FDM-1(A) automatically assigns itself to two addressable points, starting with the original address. For example, if the FDM-1(A) is set to address “26”, then it will automatically assign itself to addresses “26” and “27”.

NOTE: *“Ones” addresses on the FDM-1(A) are 0, 2, 4, 6, or 8 only. Terminals 6 and 7 use the first address, and terminals 8 and 9 use the second address.*

CAUTION:
Avoid duplicating addresses on the system.

Installation

FMM-1(A), FZM-1(A), and FDM-1(A) modules mount directly to a standard 4" (10.16 cm) square, 2.125" (5.398 cm) deep, electrical box. They may also be mounted to the SMB500 surface-mount box. Mounting hardware and installation instructions are provided with each module. All wiring must conform to applicable local codes, ordinances, and regulations. These modules are intended for power-limited wiring only.

The FMM-101(A) module is intended to be wired and mounted without rigid connections inside a standard electrical box. All wiring must conform to applicable local codes, ordinances, and regulations.

Agency Listings and Approvals

In some cases, certain modules may not be listed by certain approval agencies, or listing may be in process. Consult factory for latest listing status.

- **UL:** S635
- **ULC:** S635
- **FM Approved**
- **CSFM:** 7300-0028:0219
- **MEA:** 457-99-E
- **U.S. Coast Guard:**
  - 161.002/23/3 *(AFP-200: FMM-1/-*
  - 161.002/42/1 *(NFS-640: FMM-1/-*
- **Lloyd’s Register:**
  - 03/60011/E1 *(FMM-1/-101, FZM-*
  - 94/60004/E2 *(AFP-200: except Fl*
  - 02/60007 *(NFS-640: FDM-1)*
- **FDNY:** COA #6038 (NFS2-640, N (NFS2-3030)

Reviewed for Code Compliance
Inspections Division
Approved with Conditions

Date: 05/06/15

Product Line Information

NOTE: *“A” suffix indicates ULC-listed model.*

FMM-1(A): Monitor module.

FMM-101(A): Monitor module, miniature.

FZM-1(A): Monitor module, two-wire detectors.

FDM-1(A): Monitor module, dual, two independent Class B circuits.

SMB500: Optional surface-mount backbox.

NOTE: *See installation instructions and refer to the SLC Wiring Manual, PN 51253.*

Reviewed for Code Compliance
Inspections Division
Approved with Conditions

Date: 05/06/15

FlashScan® and NOTIFIER® are registered trademarks and FireWatch™ is a trademark of Honeywell International Inc.
©2010 by Honeywell International Inc. All rights reserved. Unauthorized use of this document is strictly prohibited.

ISO 9001 CERTIFIED
ENGINEERING & MANUFACTURING QUALITY SYSTEMS

This document is not intended to be used for installation purposes.
We try to keep our product information up-to-date and accurate.
We cannot cover all specific applications or anticipate all requirements.
All specifications are subject to change without notice.

Made in the U.S. A.

For more information, contact Notifier. Phone: (203) 484-7161, FAX: (203) 484-7118.
www.notifier.com

Wheelock® Exceder™

Horns and Strobes

NOTIF by Honeywell

Reviewed for Code Compliance
Inspections Division
Approved with Conditions

Date: 05/06/15

Au

General

The Wheelock® Exceder™ Series of notification appliances feature a sleek modern design and numerous features including eight candela options in one appliance, low current draw, no tools needed for setting changes, 12/24 VDC operation, universal mounting base and multiple mounting options.

Models with an audible feature 3 sound settings (90, 95, 99 dB). All switches to change settings can be set without the use of a tool and are located behind the appliance to prevent tampering. Wall models feature voltage test points to take readings with a voltage meter for troubleshooting and AHJ inspection.

The Wheelock® Exceder™ Series of wall and ceiling notification appliances feature a Universal Mounting Base (UMB) designed to simplify the installation and testing of horns, strobes, and combination horn strobes. The separate universal mounting base can be pre-wired to allow full testing of circuit wiring before the appliance is installed and the surface is finished. It comes complete with a contact cover for protection against dirt, dust, paint and damage to the contacts. The contact cover also acts as a shunting device to allow pre-wire testing for common wiring issues.

The contact cover is polarized to prevent it from being installed incorrectly and prevents the appliance from being installed while it is on the UMB. When the contact cover is removed the circuit will show an open until the appliance is installed. The UMB allows for consistent installation and easy replacement of appliances if required. Wall models provide an optional locking screw for extra secure installation, while the ceiling models provide a captive screw to prevent the screw from falling during installation.

Features

- Multiple voltages
- Voltage test points for quick troubleshooting and easy spot-checking (wall models only)
- 3 audible settings (90, 95, 99 dB)
- 8 Candela settings
  - Wall - 15/1575/30/75/95/110/135/185
  - Ceiling - 15, 30, 60, 75, 95, 115, 150, 177
- Finger-slide switches
- Sleek modern aesthetics
- Common base for wall and ceiling with 5 mounting options:
  - 1-gang
  - 2-gang
  - 4 inch square
  - 3.5 inch octagonal
  - 4 inch octagonal

Compatibility and Requirements

- Synchronize using Wheelock Sync Modules, or panels with built-in Wheelock patented sync protocol.
- Compatible with UL “Regulated Voltage” using filtered VDC or unfiltered VRMS input voltage
- Strobes produce one flash per second over the Regulated Voltage range.

Wall

Ceiling

General Notes

- All candela ratings represent minimum effective strobe intensity based on UL Standard 1971.
- Series Exceder Strobe products are Listed under UL Standards 1971 and 464 for indoor use with a temperature range of 32°F to 120°F (0°C to 49°C) and maximum humidity of 93% (± 2%) UL 464 (85% UL 1971).
- Series Exceder horns are under UL Standard 464 for audible signal appliances (Indoor use only).
- Product naming conventions: The Exceder line’s model codes break down into easy-to-remember codes.
  HN = Horn, ST = Strobe, HS = Horn-strobe, C = Ceiling Mount, W = White, and R = Red. So “STRC” can be read as “Strobe, Red, Ceiling-mount.”., and “HSW” is “Horn-strobe, white, wall-mount.”
- Refer to your fire alarm panel or power supply manual when calculating the number of devices allowed per circuit.

Architects/Engineers Specifications

The notification appliances shall be Wheelock Exceder Series HS Audible Strobe appliances, Series ST Visual Strobe appliances and Series HN Audible appliances or approved equals. The Series HS and ST Strobes shall be listed for UL Standard 1971 (Emergency Devices for the Hearing-Impaired) for Indoor Fire Protection Service. The Series HS and HN Audibles shall be UL Listed under Standard 464 (Fire Protective Signaling). All Series shall meet the requirements of FCC Part 15 Class B. All inputs shall be compatible with standard reverse polarity supervision of circuit wiring by a Fire Alarm Control Panel (FACP) with the ability to operate from 8 to 33 VDC. Indoor wall models shall incorporate voltage test points for easy voltage inspection.

The Series HS Audible Strobe and ST Strobe appliances shall produce a flash rate of one flash per second over the Regulated Voltage Range and shall incorporate a Xenon flashtube enclosed in a rugged Lexan® lens. The Series shall be of low current design. Where Multi-Candela appliances are specified, the strobe intensity shall have 8 field selectable settings at 15,

15/75, 30, 75, 95, 110, 135, 185 candela for wall mount and 15, 30, 60, 75, 95, 115, 150, 177 candela for ceiling mount. The selector switch for selecting the candela shall be tamper resistant. The 15/75 candela strobe shall be specified when 15 candela UL Standard 1971 Listing with 75 candela on-axis is required (e.g. ADA compliance). Appliances with candela settings shall show the candela selection in a visible location at all times when installed.

The audible shall have a minimum of three field selectable settings for dBA levels and shall have a choice of continuous or temporal (Code 3) audible outputs.

MOUNTING OPTIONS

The Series HS Audible Strobe, ST Strobe and Series HN Audible shall incorporate a patented Universal Mounting Base that shall allow mounting to a single-gang, double-gang, 4" square, 3.5" octagonal, 4" octagonal or 100mm European type back boxes. Two wire appliance wiring shall be capable of directly connecting to the mounting base. Continuity checking of the entire NAC circuit prior to attaching any notification appliances shall be allowed. Product shall come with contact cover to protect contact springs. Removal of an appliance shall result in a supervision fault condition by the Fire Alarm Control Panel (FACP). The mounting base shall be the same base among all horn, strobe, horn strobe, wall and ceiling models. All notification appliances shall be backwards compatible.

PHYSICAL SPECIFICATIONS

The Series HS and ST wall models shall have a low profile measuring 5.24" H x 4.58" W x 2.19" D. Series HN wall shall measure 5.24" H x 4.58" W x 1.6" D. The Series HSC and STC shall been round and have a low pr
6.68" x 2.63" D. Series HNC ceiling s
6.68" x 1.50" D.

SYNCHRONIZATION

When synchronization is required, the
patible with Wheelock®ís SM, DSM
lock® Power Supplies or other man
built-in Wheelock® Patented Sync Pro
not drift out of synchronization at any
the sync protocol fails to operate, the
non-synchronized flash-rate and still maintain one flash per second over its Regulated Voltage Range. The appliance shall also be designed so that the audible signal may be silenced while maintaining strobe activation when used with Wheelock® synchronization protocol.

Reviewed for Code Compliance
Inspections Division
Approved with Conditions

Date: 05/06/15

Standards and Codes

Modules in this series comply with UL Standard 1971, UL Standard 464, California State Fire Marshal (CSFM), and ULC.

Agency Listings

These listings and approvals apply to the modules specified in this document. In some cases, certain modules or applications may not be listed by certain approval agencies, or listing may be in process. Consult factory for latest listing status.

- **UL Listed:** S5391 (Strobes); E5946 (Horns, Horn/strobes).
- **ULC Listed**
- **CSFM Listed:** 7125-0785:168.

Specification & Ordering Information

Model	Strobe Candela	12/24 VDC	Mounting Options
Horn Strobes			
HSR	15, 15/75, 30, 75, 95, 110, 135, 185	X	Universal Mounting Base
HSW	15, 15/75, 30, 75, 95, 110, 135, 185	X	Universal Mounting Base
HSRC	15, 30, 60, 75, 95, 115, 150, 177	X	Universal Mounting Base
HSWC	15, 30, 60, 75, 95, 115, 150, 177	X	Universal Mounting Base
Strobes			
STR	15, 15/75, 30, 75, 95, 110, 135, 185	X	Universal Mounting Base
STW	15, 15/75, 30, 75, 95, 110, 135, 185	X	Universal Mounting Base
STRC	15, 30, 60, 75, 95, 115, 150, 177	X	Universal Mounting Base
STWC	15, 30, 60, 75, 95, 115, 150, 177	X	Universal Mounting Base
Horns			
HNR	—	X	Universal Mounting Base
HNW	—	X	Universal Mounting Base
HNRC	—	X	Universal Mounting Base
HNWC	—	X	Universal Mounting Base

*12 VDC models feature 15 and 15/75 settings

NOTE: *Due to continuous development of Cooper Wheelock products, specifications and offerings are subject to change without notice in accordance with Cooper Wheelock Inc., dba Cooper Notification standard terms and conditions.*

Notifier® is a registered trademark of Honeywell International Inc.
Exceder is a trademark and Wheelock® is a registered trademark of Cooper Notification.
©2010 by Honeywell International Inc. All rights reserved. Unauthorized use of this document is strictly prohibited.

This document is not intended to be used for installation purposes.
We try to keep our product information up-to-date and accurate.
We cannot cover all specific applications or anticipate all requirements.
All specifications are subject to change without notice.

Made in the U.S. A.

For more information, contact Notifier. Phone: (203) 484-7161, FAX: (203) 484-7118.
www.notifier.com

[redacted]

Reviewed for Code Compliance
Inspections Division
Approved with Conditions

Date: 05/06/15

Weatherproof Appliances - Series AH Audibles, AS Audible Strobes, RSS Strobes and ET70 Speaker Strobes and Weatherproof

*

Description:

Designed for life safety, performance and reliability, Cooper Notification's Wheelock cost effective weatherpoof notification appliances include:

Weatherproof Appliances	Series
Strobes	RSSWP
Horn Strobes	ASWP
Horns	AH-24WP, AH-12WP
Multitone Horn Strobes	MTWP
Multitone Horns	MT
Speaker Strobes	ET70WP
Speakers	ET-1010

All strobe models are UL dual listed - meeting both UL1638 and UL1971 requirements. As dual listed appliances, these weatherproof strobes, horn strobes and speaker strobes are listed for outdoor applications under UL 1638 as well as under UL 1971, the Standard for Safety Signaling Devices for Hearing Impaired. With an extended temperature range of –31°F to 150°F (-35°C to 66°C), Wheelock weatherproof appliances meet or exceed UL outdoor test requirements for rain, humidity and corrosion resistance while providing multiple strobe intensity options, including the highest strobe ratings available for area coverage per NFPA 72 strobe spacing tables (up to 185 candela for wall mounting and 177 candela for ceiling mounting).

To enable weatherproof mounting, Cooper Notification provides the industry's widest choice of mounting options for surface or unique semi-flush installation. Models are available for surface mounting to Wheelock weatherproof backboxes on walls or ceilings. The optional WP-KIT allows the weatherproof backboxes (IOB, WPBB or WPSBB) to be mounted to a recessed electrical box for concealed conduit installation. For semi-flush installation, the WPA* and WFPA* kits allow a customer to mount the weatherproof appliances to a recessed electrical box without the need for an external weatherproof backbox. See the Backboxes, Plates and Gaskets Table on page three of this document for a summarization of these mounting options and the required accessories.

All models may be synchronized using the Wheelock DSM Sync Modules, Wheelock Power Supplies or other manufacturers panels incorporating the Wheelock Patented Sync Protocol. The horn output of horn strobes can be independently controlled on 2-wire circuits using the Wheelock patented sync protocol. MTWP horn strobe models are 4-wire appliances; the strobes can be synchronized while the audible can be connected to a coded fire alarm system or can be set to produce any of eight selectable tones.

Features:

- Approvals include: UL Standards 1971, 1638, 464 and 1480 California State Fire Marshal (CSFM), New York City (MEA), Factory Mutual (FM), Chicago (BFP) and ULC . See agency approvals by model number on page two of this document
- Compliance with the following requirements: NFPA, UFC, ANSI 117.1, OSHA Part 29, 1910.165, ADA
- Weatherproof with extended temperature range of –40°F to 150°F (-40°C to 66°C)*
- Dual Listed strobe models (UL 1638 and UL 1971)
- Industry's highest strobe candela options
- Synchronize using the Wheelock Sync Modules or panels with built-in Wheelock Patented Sync Protocol
- Models with field selectable tone, dBA and candela settings
- Wall or ceiling mounting options
- Surface of semi-flush mounting
- IN/OUT wiring termination accepting two #12-18 AWG wires at each terminal

The series RSSWP, ASWP, AH-24WP, MTWP-2475W, and MT-12/24 have UL / ULC approval down to -40°F. The ET-1010 and ET70WP have UL approval down to -40°F. The AH-12WP has UL approval down to -31°F.

E5946
S5391
S2652

151-92-E

7125-0785:131 (ASWP)
7125-0785:146 (ET70WP)
7125-0785:156 (MTWP)
7300-0785:154 (RSSWP)

NOTE: All CAUTIONS and WARNINGS are identified by the symbol ⚠. All warnings are printed in bold capital letters.

⚠ WARNING: PLEASE READ THESE SPECIFICATIONS AND ASSOCIATED INSTALLATION INSTRUCTIONS CAREFULLY BEFORE US APPLYING THIS PRODUCT. VISIT WWW.COOPERNOTIFICATION.COM OR CONTACT COOPER WHEELOCK FOR THE CURRENT INSTA FAILURE TO COMPLY WITH ANY OF THESE INSTRUCTIONS, CAUTIONS OR WARNINGS COULD RESULT IN IMPROPER APPLICATION OPERATION OF THESE PRODUCTS IN AN EMERGENCY SITUATION, WHICH COULD RESULT IN PROPERTY DAMAGE, AND SERIOUS AND/OR OTHERS.

RESURGAM, CITY OF PORTLAND, MAINE

Reviewed for Code Compliance
Inspections Division
Approved with Conditions

Date: 05/06/15

General Notes:

- Strobes are designed to flash at 1 flash per second minimum over their UL Listed Regulated Voltage Range.
- All candela ratings represent minimum effective Strobe intensity based on UL Standards 1971 and 1638 as indicated in ca

Wall Mount

RSSWP

MTWP

ASWP

ET70WP

Ceiling Mount

RSSWP

MTWP

ASWP

ET70WP

Wall or Ceiling Mount

MT

AH

ET-1010

Strobe		Order Code
RSSWP-2475W-FR	Red	9013
RSSWP-2475W-FW	White	3034
RSSWP-24MCWH-FR	Red	5161
RSSWP-24MCWH-FW	White	5165
Audible Strobe		
ASWP-2475W-FR	Red	9012
ASWP-24MCWH-FR	Red	5137
ASWP-24MCWH-FW	White	5140
Multi-tone Strobe		
MTWP-2475W-FR	Red	8420
MTWP-2475W-FW	White	3112
MTWP-24MCWH-FR	Red	5132
MTWP-24MCWH-FW	White	5134
Speaker Strobe		
ET70WP-2475W-FR	Red	9077
ET70WP-2475W-FW	White	3179
ET70WP-24185W-FR	Red	4885
ET70WP-24185W-FW	White	4891
ET70WP-24135W-FR	Red	4872
ET70WP-24135W-FW	White	4875

Strobe		Order Code
RSSWP-2475C-FR	Red	4338
RSSWP-2475C-FW	White	4446
RSSWP-24MCCH-FR	Red	5167
RSSWP-24MCCH-FW	White	5187
Audible Strobe		
ASWP-2475C-FR	Red	4251
ASWP-2475C-FW	White	4502
ASWP-24MCCH-FR	Red	5149
ASWP-24MCCH-FW	White	5157
Multi-tone Strobe		
MTWP-2475C-FR	Red	4457
MTWP-2475C-FW	White	4478
MTWP-24MCCH-FR	Red	5102
MTWP-24MCCH-FW	White	5122
Speaker Strobe		
ET70WP-2475C-FR	Red	4452
ET70WP-2475C-FW	White	4454
ET70WP-24177C-FR	Red	4845
ET70WP-24177C-FW	White	4859
ET70WP-24115C-FR	Red	4550
ET70WP-24115C-FW	White	4732

Audible		Order Code
AH-24WP-R	Red	7416
AH-12WP-R	Red	7415
Horn		
MT-12/24-R	Red	5023
Speaker		
ET-1010-R	Red	3135
ET-1010-W	White	3137

UL Max. Current	AH	
	24 VDC	12 VDC
High (99) dBA	0.080	0.192
Med (95) dBA	0.043	0.108
Low (90) dBA	0.021	0.058

UL Reverberant dBA @ 10 Feet							
Watts	1/8	1/4	1/2	1	2	4	8
ET-1010	77	80	83	86	87	92	94
ET70WP	78	81	84	87	90	93	95

	Candela Ratings						
Series	UL 1971	UL 1638 @ 77°F	UL 1638 @ -40°F	RSS, ET70WP and MTWP UL Max Current (Strobe Only)	ASWP		
					High	Med	Low
2475W	30**	180	115	0.138	0.168	0.155	0.150
2475C	15	180	115	0.138	0.168	0.155	0.150
MCWH	135	135	56	0.300	0.355	0.340	0.335
	185	185	77	0.420	0.480	0.465	0.460
MCCH	115	115	47	0.300	0.355	0.340	0.335
	177	177	73	0.420	0.480	0.465	0.460
24185	185	185	77	0.420			
24177	177	177	73	0.420			

**Wall mount rating only

UL Max. Current (Audible)	MTWP/MT 24 VDC		MT 12 VDC	
dBA	HI	STD	HI	STD
Horn	0.108	0.044	0.177	0.034
Bell	0.053	0.024	0.095	0.020
March Time	0.104	0.038	0.142	0.034
Code 3 Horn	0.091	0.035	0.142	0.034
Code 3 Tone	0.075	0.035	0.105	0.021
Slow Whoop	0.098	0.037	0.142	0.035
Siren	0.104	0.036	0.152	0.030
Hi/Lo	0.057	0.025	0.114	0.026

Model Number	Agency Approvals				
Strobe	**UL**	**MEA**	**CSFM**	**FM**	**BFP**
RSSWP-2475	X	X	X	X	-
RSSWP-24MCWH	X	-	X	-	-
RSSWP-24MCCH	X	-	X	-	-
Audible Strobe					
ASWP-2475	X	X	X	X	X
ASWP-MCWH	X	-	X	-	-
ASWP-MCCH	X	-	X	-	-
Multitone Strobe					
MTWP-2475	X	X	X	X	-
MTWP-MCWH	X	-	X	-	-
MTWP-MCCH	X	-	X	-	-
Horns/Audibles					
AH-24WP	X	X	X	X	X
AH-12WP	X	X	X	X	X
MT-12/24	X	X	X	X	X
Speaker Strobe					
ET70WP-2475	X	-	X	X	-
ET70WP-185	X	-	X	X	-
ET70WP-177	X	-	X	X	-
ET70WP-115	X	-	X	X	-
ET70WP-135	X	-	X	X	-

Mounting Accessories

WFP WFPA IOB WPSBB WPBB

Reviewed for Code Compliance
Inspections Division
Approved with Conditions

Date: 05/06/15

		Order Code
Gasket Kit		
WP-KIT		4486
Flush Plates		
WFPA-R	Red	4698
WFPA-W	White	4701
WFP-R	Red	4696
WFP-W	White	4697
Backboxes		
IOB-R*	Red	5046
IOB-W*	White	5047
WPSBB-R*	Red	9751
WPSBB-W*	White	3033
WPBB-R*	Red	9014
WPBB-W*	White	4692
WBB-R	Red	2959
WBB-W	White	2960

Mounting Options:

	Backboxes, Plates, Gasket Kits		
	Surface Mount		Flush Mount
	Exposed Conduit	Concealed Conduit	
RSSWP Strobes	WPSBB	WPSBB + WP-KIT	WFP
ET70WP Speaker Strobes	IOB	IOB + WP-KIT	WFP
ASWP Horn Strobes	WPBB	WPBB + WP-KIT	WFPA
AHWP Horns	WBB	-	WFP
ET-1010 Speakers	WBB	-	WFP
MTWP Multitone Horn Strobes	IOB	IOB + WP-KIT	WFP
Multitone Horn	IOB	IOB + WP-KIT	WFP

*IOB, WPSBB and WPBB models include weep holes and plug in the event that moisture may have entered the appliance

Wiring Diagrams

SERIES MTWP AUDIBLE APPLIANCE AND STROBE OPERATE IN UNISON. RED AND BLACK SHUNT-WIRES ARE SUPPLIED.

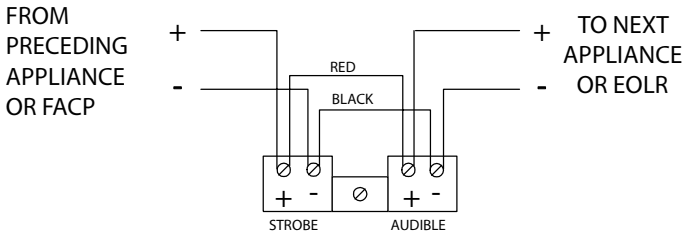

SERIES MTWP APPLIANCES SYNCHRONIZED STROBE OPERATION WITH CODED FACP

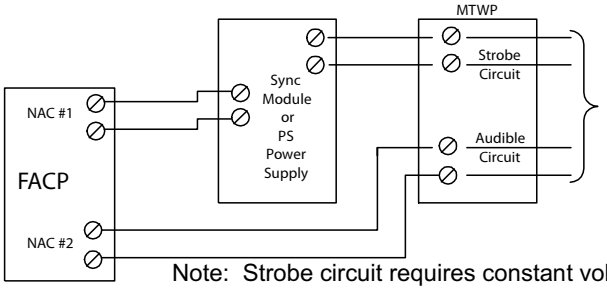

Note: Strobe circuit requires constant voltage.

SERIES RSSWP, ASWP, AHWP, MTWP AND MT-12/24 APPLIANCES

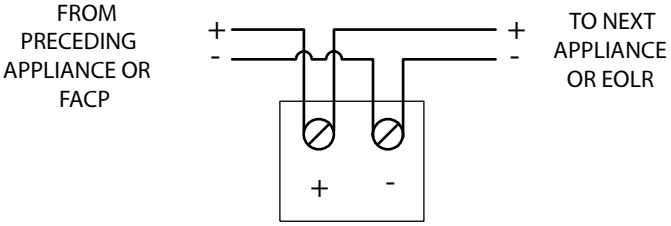

SERIES RSSWP/ASWP APPLIANCES SYNCHRONIZED W/ DSM MODULE SINGLE CLASS "A" NAC CIRCUIT

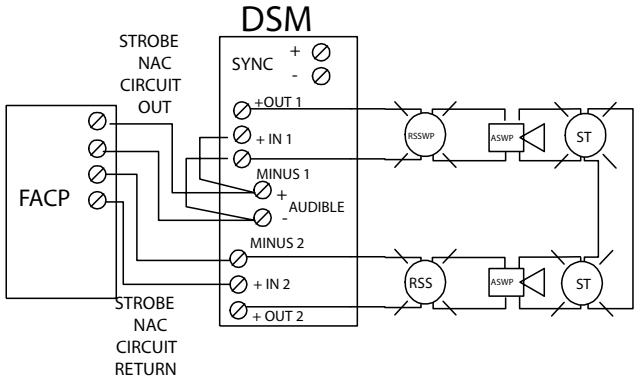

Note: Models are available in Red or White. Contact Customer Service for Order Code and Delivery.
#Refer to Data Sheet S7000 for Mounting Options

NOTE: Due to continuous development of our products, specifications and offerings are subject to change without notice in accordance with Cooper Wheelock Inc. dba Cooper Notification standard terms and conditions.

ARCHITECTS AND ENGINEERS SPECIFICATIONS

Reviewed for Code Compliance
Inspections Division
Approved with Conditions

Date: 05/06/15

General
Weatherproof notification appliances shall be UL listed for outdoor use. Weatherproof Strobe appliances shall be list 1638 (Standard for Visual Signaling Appliances) for Indoor/Outdoor use and UL Standard 1971 (Standard for Sa for Hearing Impaired). The appliances shall be available for optional wall mounting or ceiling mounting to weather either exposed conduit or concealed conduit, or semi-flush mounting to a recessed electrical box in walls or ce mounting accessories.

Weatherproof Strobes
Weatherproof Strobe appliances shall produce a minimum flash rate of 60 flashes per minute over the UL Reg of 16 to 33 VDC and shall incorporate a Xenon flashtube. The weatherproof strobes shall be available with UL up to 185 cd for wall mounting and 177 cd for ceiling mounting. UL 1638 candela ratings up to 180 cd at 77°F s strobes shall operate over an extended temperature range of –40°F to 150°F (-40°C to 66°C) and be listed for maximum humidity of 95% RH. Strobe inputs shall be polarized for compatibility with standard reverse polarity supervision of circuit wiring by a Fire Alarm Control Panel (FACP).

Weatherproof Audibles and Audible/Strobe Combinations Weatherproof horns and multitone audibles shall be listed for Indoor/Outdoor use under UL Standard 464. The horns shall be able to produce a continuous output or a temporal code-3 output that can be synchronized. The horns shall have at least 3 sound level settings. Horn/Strobe combinations shall be able to be synchronized on a single NAC.

Multitone audibles shall be able to produce 8 distinct tones selectable by dip switch and shall have at least 2 sound level settings. Multitone Audible/Strobe combinations shall have independent inputs for the audible and strobe. The strobes shall be able to be synchronized. The audibles shall be able to be coded when operated on a separate NAC.

Weatherproof Speakers and Speaker/Strobes
Weatherproof speakers and speaker/strobes shall be listed for Indoor/Outdoor use under UL Standard 1480. All speakers shall provide field selectable taps for 1/8W to 8W operation for either 25 VRMS or 70 VRMS audio systems and shall incorporate a sealed back construction for extra protection and improved audibility. Speakers without strobes shall be Wheelock Series ET-1010. They shall be listed to produce up to 94 dBA and shall incorporate a vandal resistant grille design. Speaker with strobes shall be Wheelock Series ET70WP. They shall be available for surface or semi-flush mounting to walls or ceilings and shall be listed to produce up to 93 dBA.

Synchronization Modules
When synchronization of strobes or temporal code-3 audibles is required, the appliances shall be compatible with the Wheelock Series DSM Sync Modules, Wheelock Power Supplies or other manufacturers panels with built-in Wheelock Patented Sync Protocol. The strobes and audibles shall not drift out of synchronization at any time during operation.

Series ASWP audibles and strobes shall be able to be synchronized on a 2-wire circuit with the ability to silence the audible if required. The strobes on Series MT multitone audible/strobe appliances shall be able to be synchronized and shall be able to be operated on a separate circuit from the audibles while the audible circuit is connected to a coded or continuous NAC.

Weatherproof Mounting Accessories
Weatherproof mounting options shall include surface mounting or semi-flush mounting to walls or ceilings. Surface mounted appliances shall mount to Wheelock IOB, WBB, WPBB or WPSBB weatherproof backboxes using either exposed conduit or concealed conduit. For concealed conduit the weatherproof backbox shall be mounted to a recessed electrical box with Wheelock's WP-KIT to provide a weatherproof seal for the electrical box. Semi-flush mounted appliances shall mount to a recessed electrical box using Wheelock WFP or WFPA flush plates to provide a weatherproof seal between the electrical box and the appliance.

NEMA Member

WE ENCOURAGE AND SUPPORT NICET CERTIFICATION
3 YEAR WARRANTY

S9004 WP 11/12

NJ Location
273 Branchport Ave.
Long Branch, NJ 07740
P: 800-631-2148
F: 732-222-8707
www.coopernotification.com

Cooper Notification is Wheelock® MEDC SAFEPATH® WAVES Roam Secure

COOPER Notification

NO EXCUSES!

FA

Reviewed for Code Compliance
Inspections Division
Approved with Conditions

Date: 05/06/15

FIRE ALARM DOCUMENTS

The FAD is the perfect fit to meet the demanding code requirements today. SAE's number one goal is to manufacture code compliant solutions and this product allows you to do just that. NFPA 72 2010 section 6.2.2.1 states, "A record of installed software and firmware version numbers shall be maintained at the location of the fire alarm control unit."

This durable 16 gauge steel enclosure with a solid piano hinge and key lock will keep all of your code required documents in one safe place. With a 4GB USB flash drive it stores your fire alarm software safe and secure eliminating the occurrences of the software not being on site when technicians arrive to service the system. Along with your fire alarm software you can store your test & inspection documents, service records, manuals & AS built drawings for the system. Using a standard USB B connector it allows you to plug in with any standard SB printer cable to upload or download information.

The FDB is designed to hold critical manuals and documents with a durable steel retainer. It has designated hooks to organize key rings and hold important business cards for easy access and reference. Inside the cover it has a organized note table that allows for documentation for passwords and other critical system information.

Standard Features:

- Installed with a 4 gig digital flash drive with USB B connector
- 2 Key ring hooks to hold system keys
- Business card holder for key contacts
- Overall Dimensions are 12” x 13” tall and 2 ¼ deep
- 16 gauge steel box and cover for security
- Durable powercoat baked on finish other colors available
- Standard ¾”cat 30 key lock other lock assemblies available
- Solid stainless steel piano hinge
- Permanently screened white ink 1” high “Fire Alarm Documents”
- Legend sheet for passwords and system information

NEMA
NFPA
Made In U.S.A.

ISO 9001
REGISTERED
COMPANY

ADA

ACEBOX
Space Age Electronics, Inc.
www.1sae.com
800.486.1723 Toll Free
508.485.0966 Local
508.485.4740 Fax

No Excuses, Just Solutions!

SPACE AGE ELECTRONICS, INC.

Reviewed for Code Compliance
Inspections Division
Approved with Conditions

Date: 05/06/15

Specifications:

The fire alarm documents box (FAD) shall be constructed of 18 gauge cold rolled steel. It coat epoxy finish. The cover shall be permanently screened with 1" high lettering "FIRE A with white indelible ink. The access door shall be locked with a 3/4" barrel lock and the hi width 12" stainless steel piano hinge. The enclosure will supply 4 mounting holes. Inside the enclosure will accommodate standard 8 1/2 x 11 manuals and loose document records that will be protected within the enclosure. A legend sheet will be permanently attached to the door for system required documentation, key contacts and system information. The FAD will have securely mounted inside a minimum of 4 Gigabyte digital flash memory drive with a standard USB B connector for uploading and downloading information. The drive shall not be accessible without tools to any person whom gains access to the records. The enclosure shall also provide 2 key ring holders with a location to mount standard business type cards for key contact personnel.

USB Storage Interface Requires Standard USB-B Connector

Key Ring Hooks

Business Card Holder

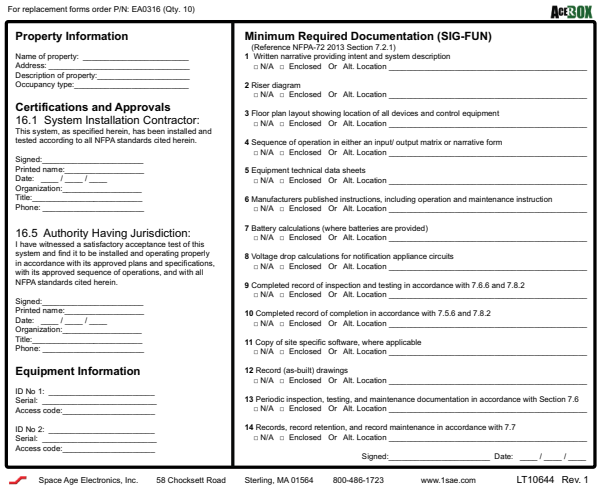

For replacement forms order P/N: EA0316 (Qty. 10)

AceBOX

Property Information

Name of property: _____
Address: _____
Description of property: _____
Occupancy type: _____

Certifications and Approvals

16.1 System Installation Contractor:
This system, as specified herein, has been installed and tested according to all NFPA standards cited herein.

Signed: _____
Printed name: _____
Date: ____ / ____ / ____
Organization: _____
Title: _____
Phone: _____

16.5 Authority Having Jurisdiction:
I have witnessed a satisfactory acceptance test of this system and find it to be installed and operating properly in accordance with its approved plans and specifications, with its approved sequence of operations, and with all NFPA standards cited herein.

Signed: _____
Printed name: _____
Date: ____ / ____ / ____
Organization: _____
Title: _____
Phone: _____

Equipment Information

ID No 1: _____
Serial: _____
Access code: _____

ID No 2: _____
Serial: _____
Access code: _____

Minimum Required Documentation (SIG-FUN)
(Reference NFPA-72 2013 Section 7.2.1)

1 Written narrative providing intent and system description
□ N/A □ Enclosed Or Alt. Location _____

2 Riser diagram
□ N/A □ Enclosed Or Alt. Location _____

3 Floor plan layout showing location of all devices and control equipment
□ N/A □ Enclosed Or Alt. Location _____

4 Sequence of operation in either an input/ output matrix or narrative form
□ N/A □ Enclosed Or Alt. Location _____

5 Equipment technical data sheets
□ N/A □ Enclosed Or Alt. Location _____

6 Manufacturers published instructions, including operation and maintenance instruction
□ N/A □ Enclosed Or Alt. Location _____

7 Battery calculations (where batteries are provided)
□ N/A □ Enclosed Or Alt. Location _____

8 Voltage drop calculations for notification appliance circuits
□ N/A □ Enclosed Or Alt. Location _____

9 Completed record of inspection and testing in accordance with 7.6.6 and 7.8.2
□ N/A □ Enclosed Or Alt. Location _____

10 Completed record of completion in accordance with 7.5.6 and 7.8.2
□ N/A □ Enclosed Or Alt. Location _____

11 Copy of site specific software, where applicable
□ N/A □ Enclosed Or Alt. Location _____

12 Record (as-built) drawings
□ N/A □ Enclosed Or Alt. Location _____

13 Periodic inspection, testing, and maintenance documentation in accordance with Section 7.8
□ N/A □ Enclosed Or Alt. Location _____

14 Records, record retention, and record maintenance in accordance with 7.7
□ N/A □ Enclosed Or Alt. Location _____

Signed: _____ Date: ____ / ____ / ____

Space Age Electronics, Inc. 58 Chocksett Road Sterling, MA 01564 800-486-1723 www.1sae.com LT10644 Rev. 1

Legend sheet for storing system information including contacts, sign-off , maintenance & test information, and alternate locations of additional records.

Ordering Information:

Part #	Description
SSU00685	**Fire Alarm Storage Cabinet RED**
SSU00686	**Custom screening with your Logo**

Check out our Infinity line eFAD single gang 2 Gig digital storage solutions (IAMEFAD)

AceBOX
Space Age Electronics, Inc.
www.1sae.com
800.486.1723 Toll Free
508.485.0966 Local
508.485.4740 Fax

No Excuses, Just Solutions!

This document is subject to change without notice, see doc # ED0479 for legal disclaimer

Knox-Box® 32
HINGED

High Security Industrial/Government Key Box

Reviewed for Code Compliance
Inspections Division
Approved with Conditions

Date: 05/06/15

Recessed Mount
with Face Flange

Surface Mount

The number one high-security KNOX-BOX® is used for most commercial applications including businesses, schools, government and public buildings, community associations and apartment complexes. The 3200 Series KNOX-BOX holds keys, access cards and other small items necessary for emergency access.

The hinged-door 3200 Series KNOX-BOX is more convenient than the lift-off door version because it allows single-handed operation and opened or closed, it's all one unit.

Features and Benefits

- Holds up to 10 keys and access cards in interior compartment
- Ensures high security. Box and lock are UL® Listed
- Includes a Knox-Coat® proprietary finishing process that protects Knox products up to four times better than standard powder coat
- Resists moist conditions with a weather resistant door gasket
- Hinged door allows single-handed operation
- Colors: Black, Dark Bronze or Aluminum
  Weight: Surface mount - 8 lbs.
  Recessed mount - 9 lbs.

Options

- Alarm tamper switches (UL Listed)
- Recessed Mounting Kit (RMK) for recessed models only
- Inside switch for use on electrical doors, gates and other electrical equipment

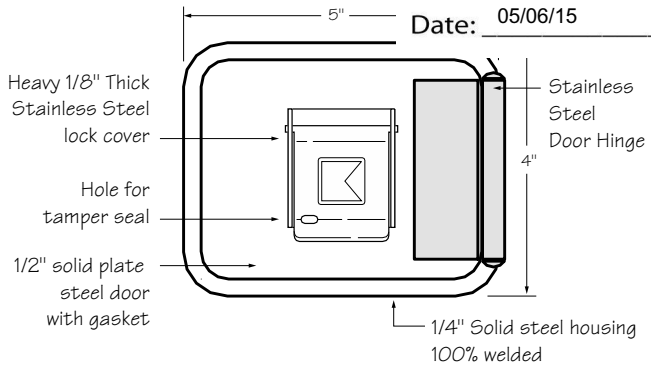

3200 Surface Mount

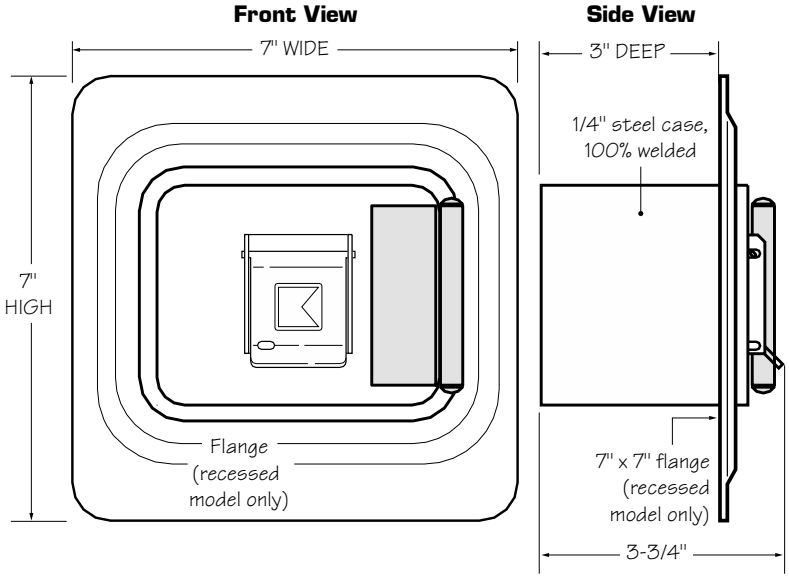

3200 Recessed Mount

Ordering Specifications

To insure procurement and delivery of the 3200 Series KNOX-BOX, it is suggested that the following specification paragraph be used:

KNOX-BOX surface/recessed mount with hinged door, with/without UL Listed tamper switches. 1/4" plate steel housing, 1/2" thick steel door with interior gasket seal and stainless steel door hinge. Box and lock UL Listed. Lock has 1/8" thick stainless steel dust cover with tamper seal mounting capability.

Exterior Dimensions:	Surface mount body- 4"H x 5"W x 3-3/4"D Recessed mount flange- 7"H x 7"W
Lock:	UL Listed. Double-action rotating tumblers and hardened steel pins accessed by a biased cut key.
Finish:	Knox-Coat® proprietary finishing process
Colors:	Black, Dark Bronze or Aluminum
P/N:	3200 Series KNOX-BOX (mfr's cat. ID)
Mfr's Name:	**KNOX COMPANY**

KNOX COMPANY • 1601 W. Deer Valley Road, Phoenix, AZ 85027 • (800) 552-5669 • (623) 687-2300 • Fax (623) 687-2299 • Web: www.knoxbox.com • E-mail: info@knoxbox.com

Reviewed for Code Compliance
Inspections Division
Approved with Conditions
Date: 05/06/15

Suggested minimum mounting height
6 feet above ground

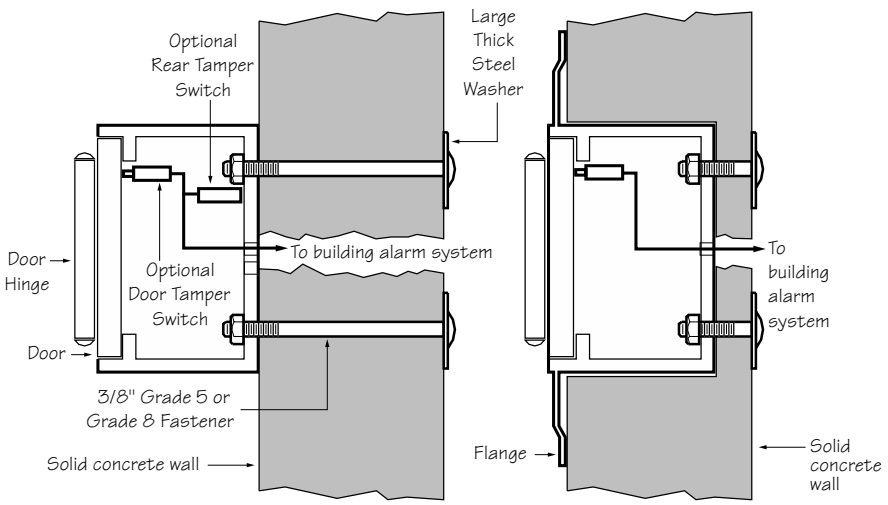

3200 Series Hinged Door Surface Mount | **3200 Series Hinged Door Recess Mount**

Inside View

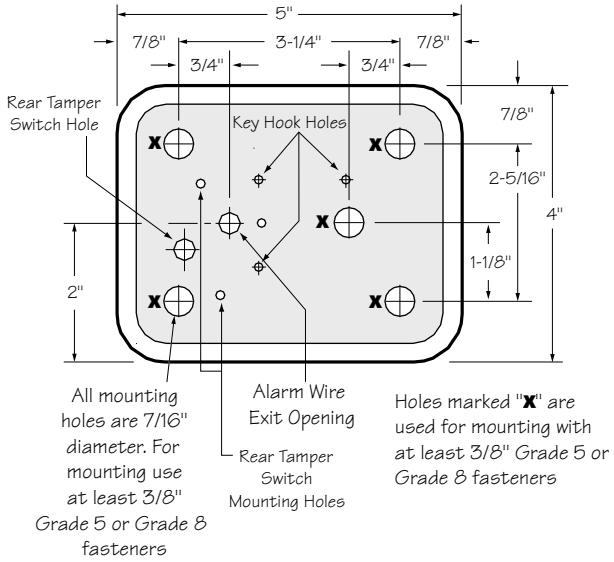

Attention: KNOX-BOX® is a very strong device that MUST be mounted properly to ensure maximum security and resist physical attack.

Knox® Rapid Entry System
The Knox Company manufactures a complete line of high security products including Knox-Box key boxes, key vaults, cabinets, key switches, padlocks, locking FDC caps, plugs and electronic master key security systems. For more information or technical assistance, please call Customer Service at 1-800-552-5669.

Recesse

The 3200 Recesse
for recessed moc
housing and mou
place in new concrete or masonry construction. After construction is completed, the KNOX-BOX mounts inside the RMK. The RMK may only be used in new concrete or masonry construction.

Installation In Cast Concrete

The optional Recessed Mounting Kit is for use in new concrete or masonry construction only. The kit includes a shell housing and mounting hardware to be cast-in-place. The KNOX-BOX is mounted into the shell housing after construction is completed.

Dimensions

Rough-in Dimensions: 6-1/2"H x 6-1/2"W x 5"D

IMPORTANT: Care should be taken to insure that the front of the RMK shell housing, including the cover plate and screw heads, is flush with the finish wall. The RMK must be plumbed to insure vertical alignment of the vault.

Recessed Mounting Using Recessed Mounting Kit (RMK)

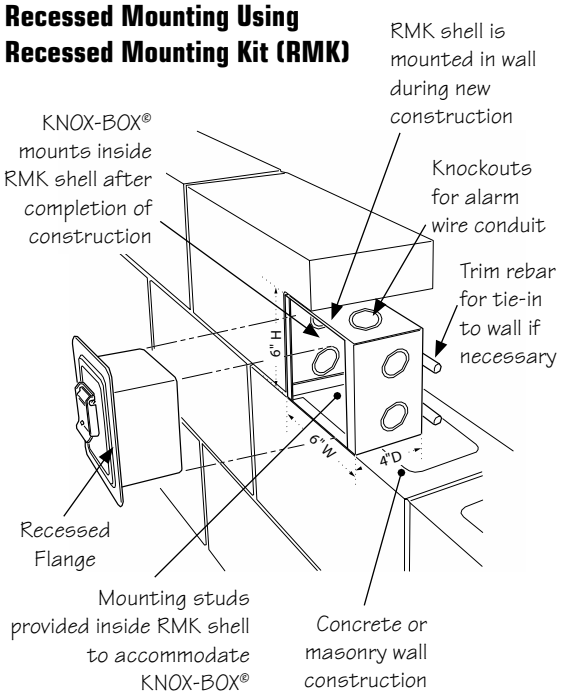

© Copyright 2013. Knox Company