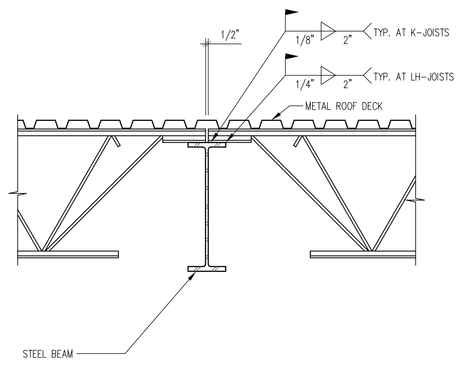

TYPICAL JOIST-TO-BEAM CONNECTION

SECTION 1/S300
SCALE: 3/4" = 1'-0"

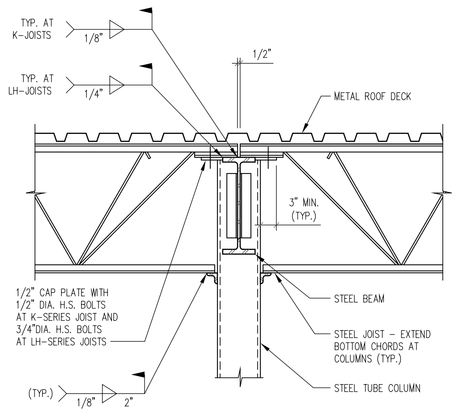

TYPICAL JOIST-TO-COLUMN CAP PLATE CONNECTION

SECTION 2/S300
SCALE: 3/4" = 1'-0"

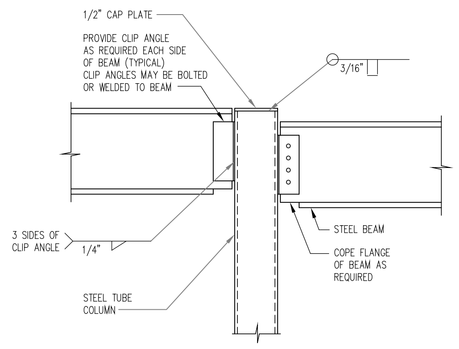

NOTE: ALL CONNECTIONS SHALL BE 2-SIDED. FINAL CONNECTION SHALL FULLY DEVELOP 50% OF THE MAXIMUM ALLOWABLE WEB SHEAR CAPACITY OF THE BEAM AS TABULATED IN PART 2 OF THE NINTH EDITION, AISC "MANUAL OF STEEL CONSTRUCTION (UNLESS A GREATER LOAD IS INDICATED).

TYPICAL BEAM-TO-COLUMN OR BEAM-TO-BEAM SHEAR CONNECTION

SECTION 3/S300
SCALE: 3/4" = 1'-0"

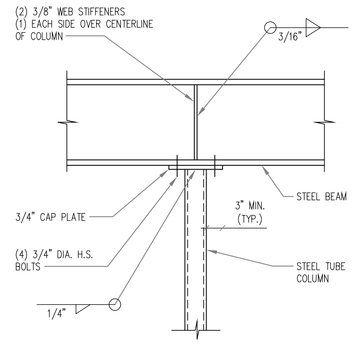

TYPICAL BEAM OVER COLUMN CONNECTION

SECTION 4/S300
SCALE: 3/4" = 1'-0"

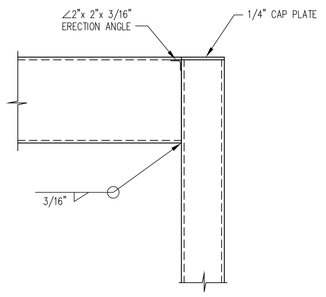

NOTE: BEAM-TO-BEAM CONNECTION IS SIMILAR

TYPICAL TUBE BEAM - TO - TUBE COLUMN CONNECTION

SECTION 5/S300
SCALE: 3/4" = 1'-0"

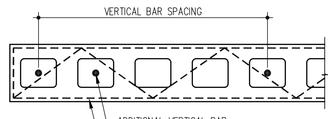

CORNER

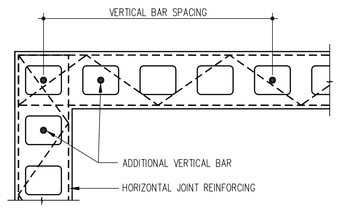

END OF JAMB

NOTE: SEE PLAN OR SCHEDULE FOR REINFORCING REQUIREMENTS

TYPICAL MASONRY WALL REINFORCING

DETAIL A/S300
N.T.S.

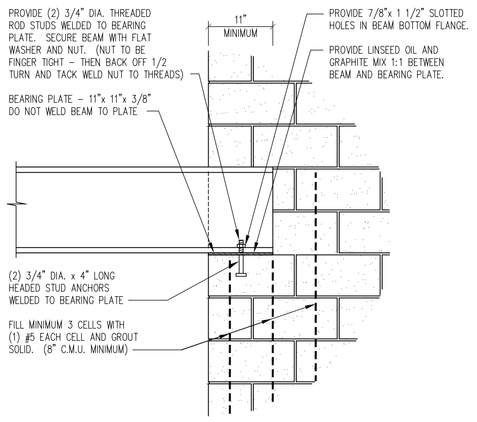

TYPICAL BEAM BEARING PARALLEL TO MASONRY WALL

DETAIL B/S300
N.T.S.

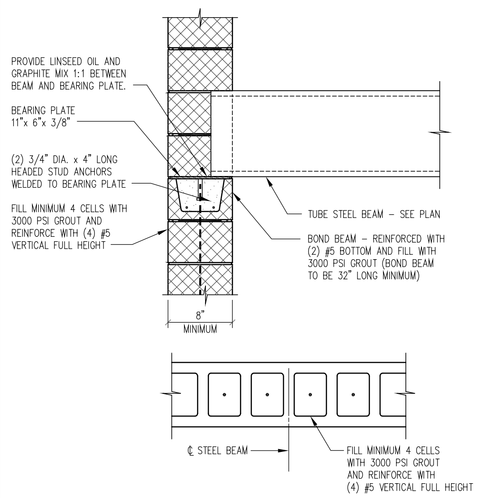

TYPICAL BEAM BEARING PERPENDICULAR TO MASONRY WALL

DETAIL C/S300
N.T.S.

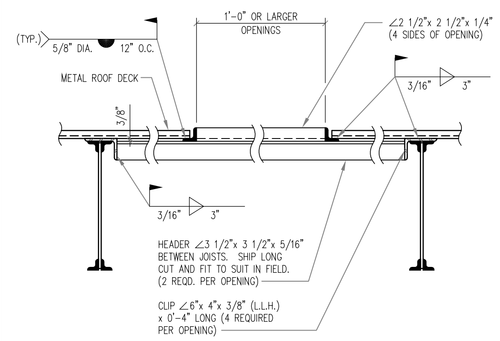

NOTE: SEE ARCH., MECH. AND REFRIG. DRAWINGS FOR EXACT NUMBER, SIZE AND LOCATION OF ALL ROOF OPENINGS EXCEPT PENETRATIONS THROUGH ROOF LESS THAN 12" ACROSS.

TYPICAL ROOF OPENING

DETAIL D/S300
N.T.S.

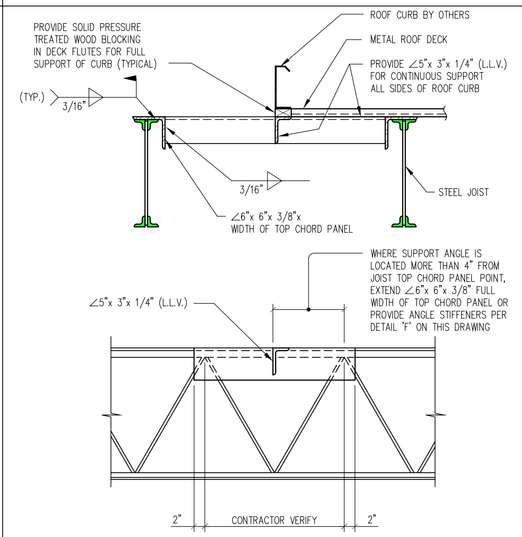

TYPICAL ROOFTOP UNIT SUPPORT

DETAIL E/S300
N.T.S.

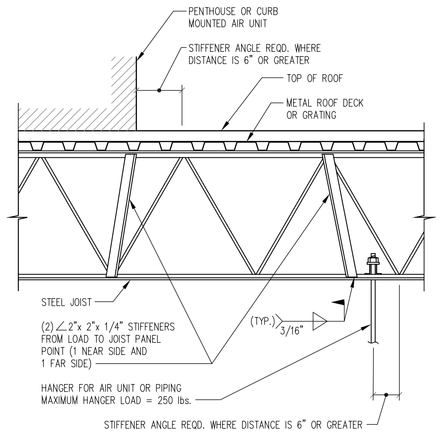

TYPICAL JOIST REINFORCING FOR POINT LOADING

DETAIL F/S300
N.T.S.

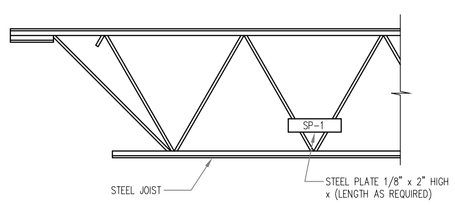

NOTE: TACK WELD PLATE TO **NORTH** OR **EAST** END OF ALL SPECIAL JOISTS. PLATE SHALL HAVE THE SPECIAL JOIST NUMBER MARKED PLAINLY ON IT FOR VERIFICATION BY THE ENGINEER.

TYPICAL CORNER STRAP DETAIL

DETAIL G/S300
N.T.S.

FACILITIES DESIGN

FACILITIES DESIGN, INC.
3904 Abel Drive
Columbia, Pennsylvania 17512
Phone: (717) 285-9442
Fax: (717) 285-3102
Email: info@facilitiesdesign.com
Web: www.facilitiesdesign.com
C.A. NUMBER: 20031118 F

Engineering Design Services
Architectural Engineering
Building
Foundation ■ Structural
Plumbing ■ HVAC ■ Fire Protection
Central Refrigeration ■ Thermal Storage
Lighting ■ Power Distribution ■ Controls
Thermal Insulation
Materials Handling

Project Services
Project Planning ■ Project Management
Master Planning
Feasibility Studies
Material Handling Systems Studies

–	–	–
–	–	–
–	–	–
–	–	–
–	–	–
–	–	–
–	–	–
–	–	–
–	–	–
0	08-29-03	ISSUED FOR BIDDING

REVISIONS

This drawing and all information contained herein, remains the property of FACILITIES DESIGN, INC. All rights are expressly reserved and this drawing may not be reproduced in whole or in part without the express written consent of FACILITIES DESIGN, INC.

Do not scale drawing. Contractor shall verify all dimensions and conditions prior to construction. Any discrepancies shall be reported to FACILITIES DESIGN, INC. prior to construction for resolution.

PROJECT MANAGER: M.S.M.
DESIGNED BY: K.A.S.
DRAWN BY: G.L.B.
CHECKED BY: R.G.C.
SEAL:

PROJECT:

NEW MILK COOLER

Oakhurst DAIRY

364 FORREST AVENUE
PORTLAND, MAINE 04101

PROJECT NUMBER: **2003.1141.0**

DATE: **AUGUST 29, 2003**

DRAWING TITLE:

TYPICAL STRUCTURAL SECTIONS AND DETAILS

DRAWING NUMBER: **S300**
REVISION: **0**

F:\DATA\2003\1141\Dwg\STRUCT\1141 S300.dwg, 09/22/2003 02:30:17 PM, 0.8