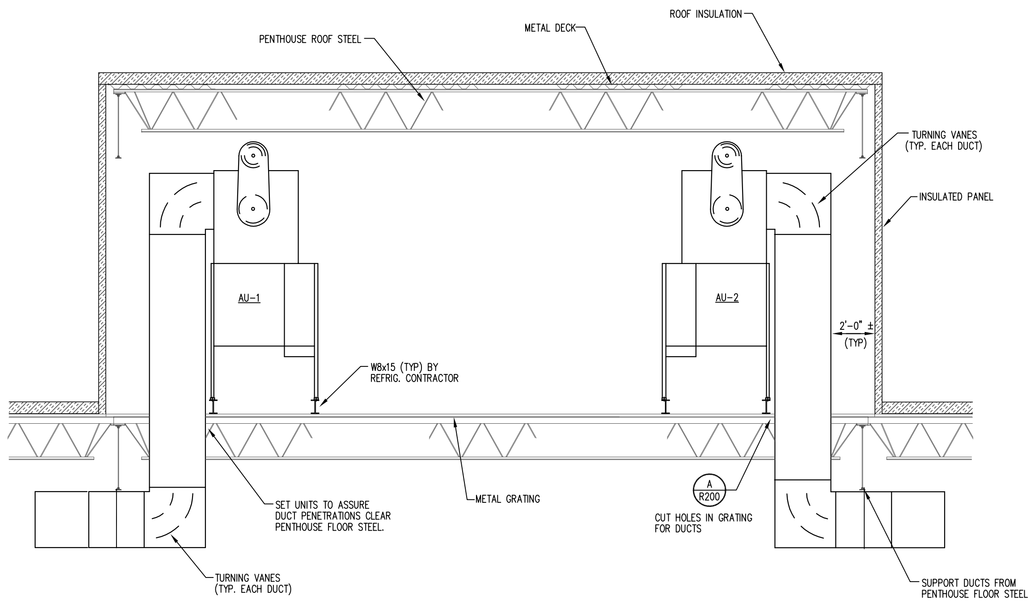

SECTION 1

SCALE: 1/4" = 1'-0" R200

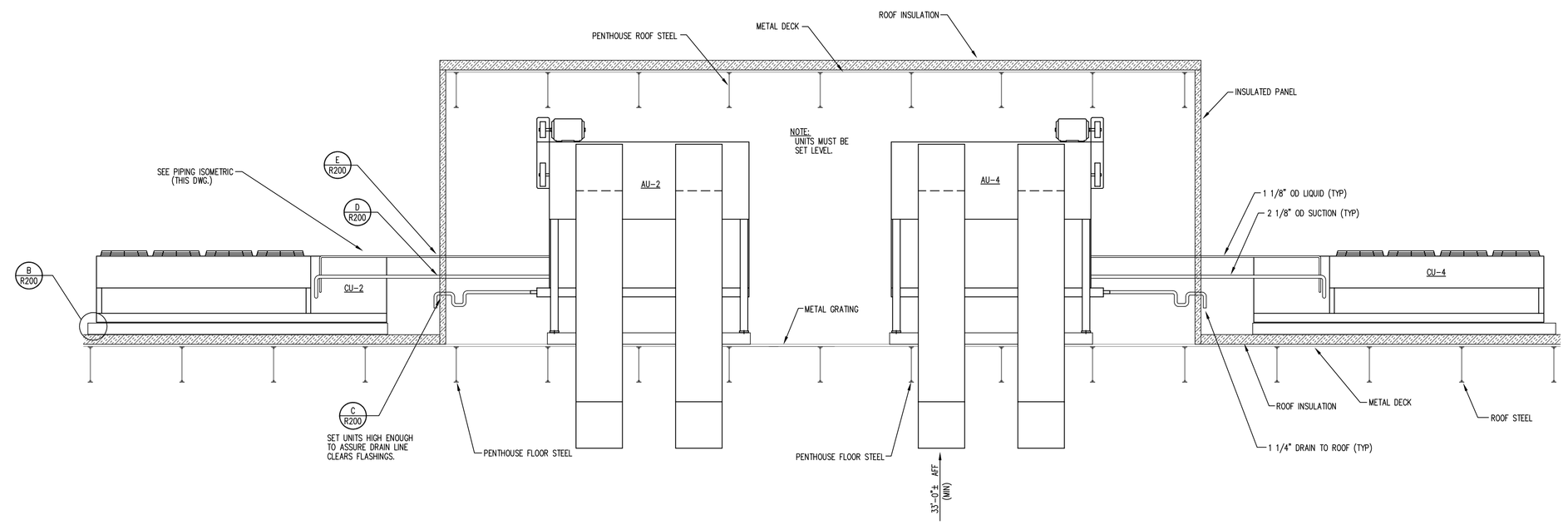

SECTION 2

SCALE: 1/4" = 1'-0" R200

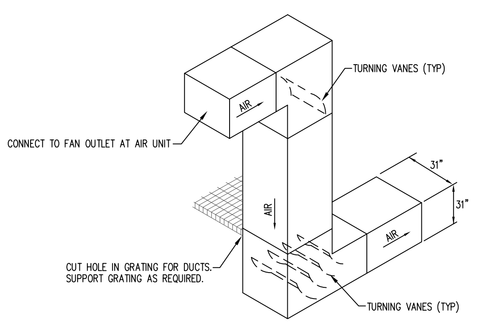

TYPICAL DUCT DETAIL A

NO SCALE R200

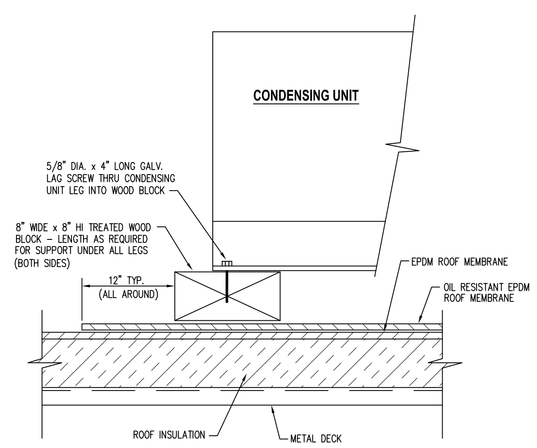

ROOF MOUNTED CONDENSING UNIT DETAIL B

NO SCALE R200

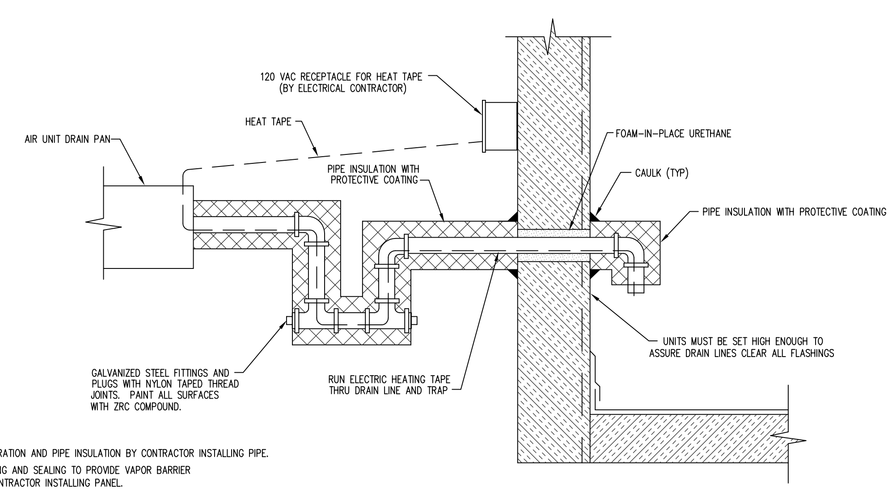

NOTES:

1. PENETRATION AND PIPE INSULATION BY CONTRACTOR INSTALLING PIPE.
2. FOAMING AND SEALING TO PROVIDE VAPOR BARRIER BY CONTRACTOR INSTALLING PANEL.
3. TRIM METAL SKIN ON PANEL TO 1" LARGER THAN PIPE DIAMETER.
4. HEAT TRACE ALL DRAIN LINES PER TAPE MANUFACTURERS SPECS.

DRAIN LINE PENETRATION DETAIL C

NO SCALE R200

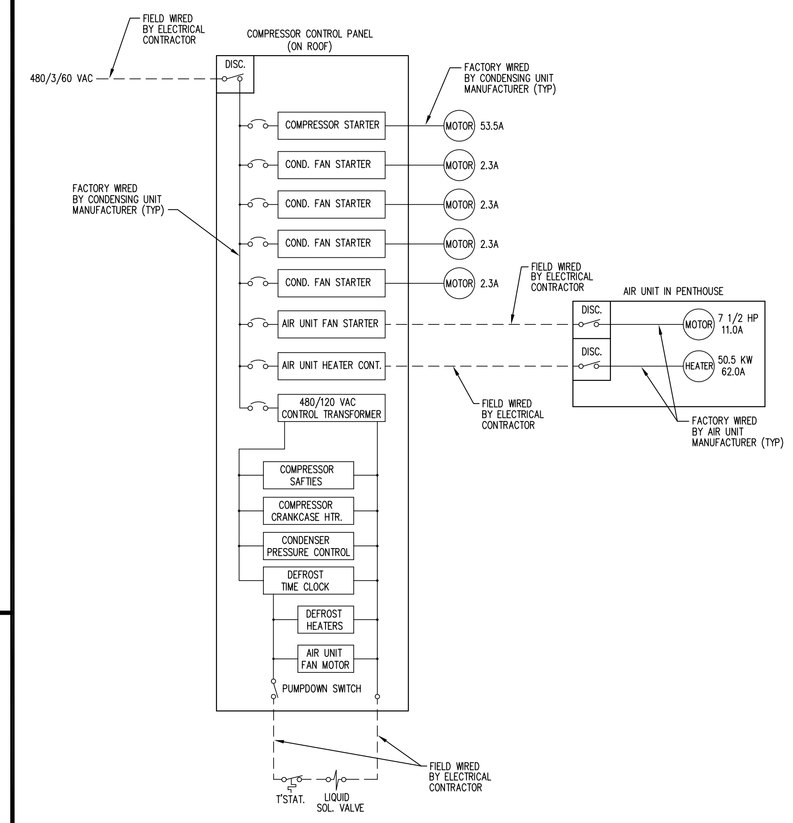

TYP. CONDENSING UNIT WIRING DIAGRAM

NO SCALE

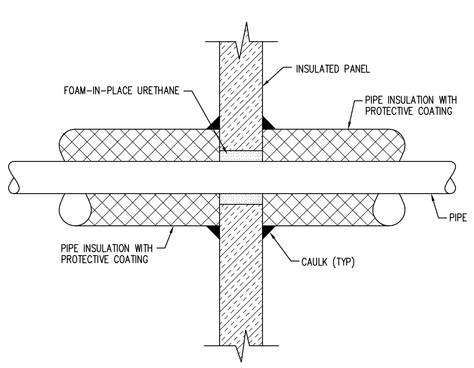

NOTES:

1. PENETRATION AND PIPE INSULATION BY CONTRACTOR INSTALLING PIPE.
2. FOAMING AND SEALING TO PROVIDE VAPOR BARRIER CONTINUITY OF PANEL BY CONTRACTOR INSTALLING INSULATED PANELS.
3. TRIM METAL SKIN OF PANEL TO 1" LARGER THAN PIPE DIAMETER.

INSULATED PIPE PENETRATION DETAIL D

NO SCALE R200

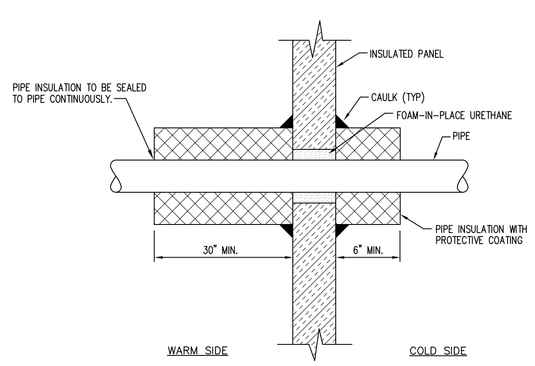

NOTES:

1. PENETRATION AND PIPE INSULATION BY CONTRACTOR INSTALLING PIPE.
2. FOAMING AND SEALING TO PROVIDE VAPOR BARRIER CONTINUITY OF PANEL BY CONTRACTOR INSTALLING INSULATED PANELS.
3. TRIM METAL SKIN OF PANEL TO 1" LARGER THAN PIPE DIAMETER.

NON-INSULATED PIPE PENETRATION DETAIL E

NO SCALE R200

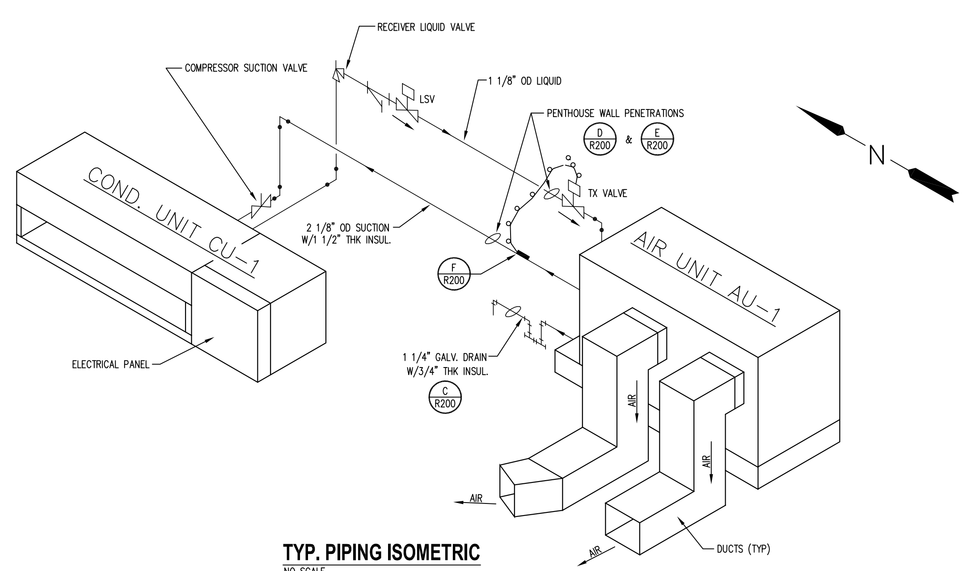

TYP. PIPING ISOMETRIC

NO SCALE

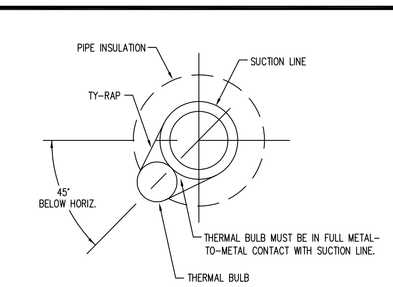

THERMAL BULB MOUNTING DETAIL F

NO SCALE R200

FACILITIES DESIGN

FACILITIES DESIGN, INC.

3904 Abel Drive
Columbia, Pennsylvania 17512
Phone: (717) 285-9442
Fax: (717) 285-3102
Email: info@facilitiesdesign.com
Web: www.facilitiesdesign.com
CA NUMBER: CA 20031118F

Engineering Design Services

Architectural Engineering
Building
Foundation ■ Structural
Plumbing ■ HVAC ■ Fire Protection
Central Refrigeration ■ Thermal Storage
Lighting ■ Power Distribution ■ Controls
Thermal Insulation
Materials Handling

Project Services

Project Planning ■ Project Management
Master Planning
Feasibility Studies
Material Handling Systems Studies

–	–	–
–	–	–
–	–	–
–	–	–
–	–	–
–	–	–
–	–	–
–	–	–
–	–	–
–	–	–
0	3-1-04	ISSUED FOR BIDDING

REVISIONS

This drawing and all information contained herein, remains the property of FACILITIES DESIGN, INC. All rights are expressly reserved and this drawing may not be reproduced in whole or in part without the express written consent of FACILITIES DESIGN, INC.

Do not scale drawing. Contractor shall verify all dimensions and conditions prior to construction. Any discrepancies shall be reported to FACILITIES DESIGN, INC. prior to construction for resolution.

PROJECT MANAGER: M.S.M.
DESIGNED BY: D.N.M.
DRAWN BY: D.N.M.
CHECKED BY: D.N.M.
SEAL:

PROJECT:

NEW MILK COOLER

Oakhurst DAIRY

364 FORREST AVENUE
PORTLAND, MAINE 04101

PROJECT NUMBER: **0167.00**

DATE: **MARCH 1, 2004**

DRAWING TITLE: **REFRIGERATION SECTIONS AND DETAILS**

DRAWING NUMBER: **R200**

REVISION: **0**

H:\FDCS\2004\0167.00\Dwg\Dwfrg\0167 R200.dwg, 03/02/2004 10:48:41 AM, GJB