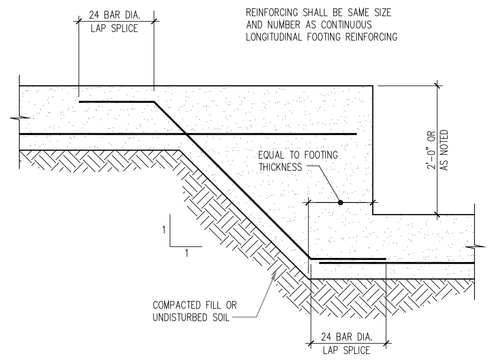

TYPICAL STEP FOOTING

DETAIL A F201
N.T.S.

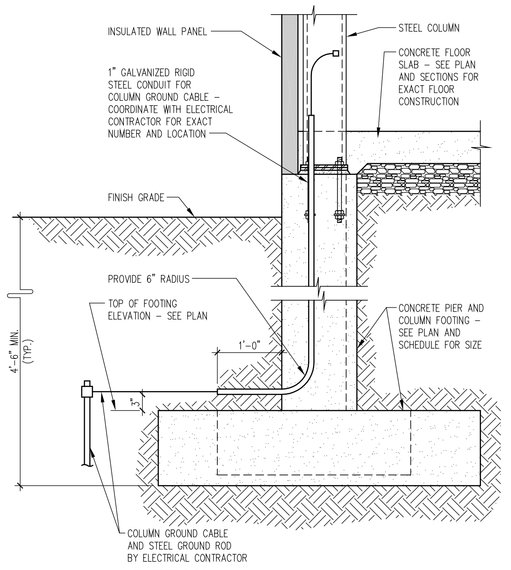

DETAIL B F201
N.T.S.

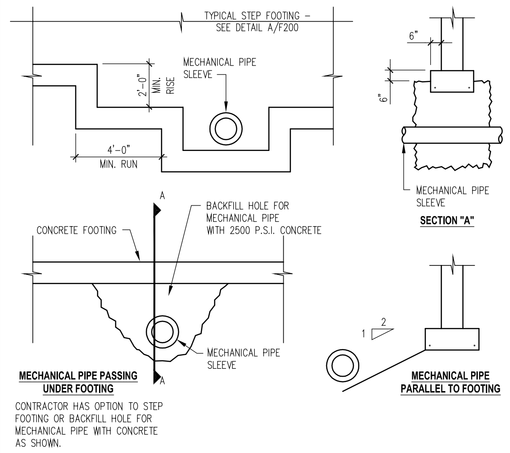

DETAIL C F201
N.T.S.

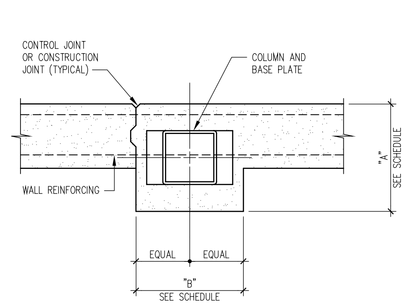

TYPICAL PIER DETAIL AT CONCRETE WALL

DETAIL D F201
N.T.S.

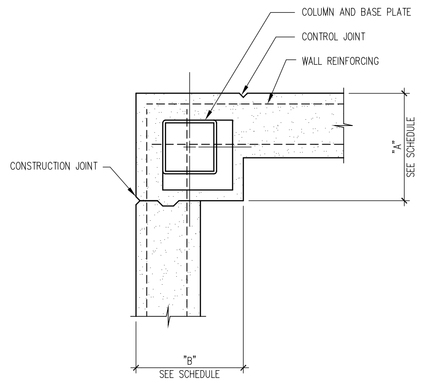

DETAIL E F201
N.T.S.

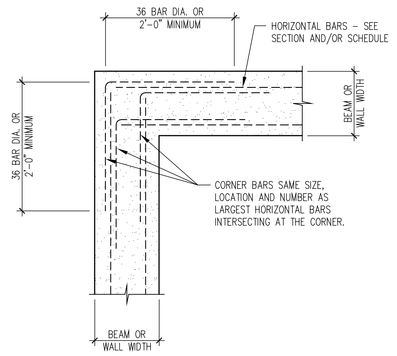

DETAIL F F201
N.T.S.

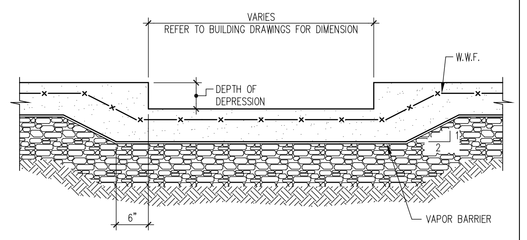

TYPICAL SLAB DEPRESSION

DETAIL G F201
N.T.S.

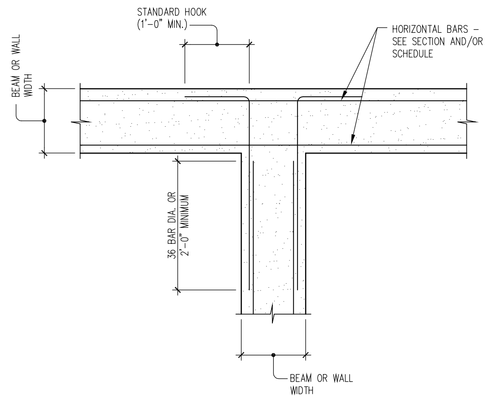

TYPICAL CORNER BAR DETAIL

DETAIL H F201
N.T.S.

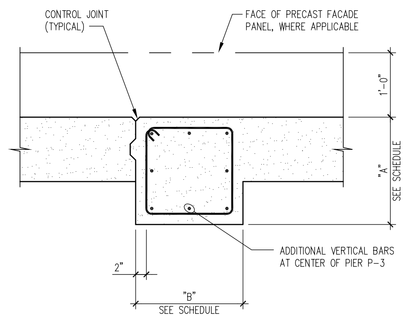

NOTE: WALL REINFORCING NOT SHOWN FOR CLARITY.

PIER DETAIL (P-1, P-2, P3 AND P-5)

DETAIL J F201
N.T.S.

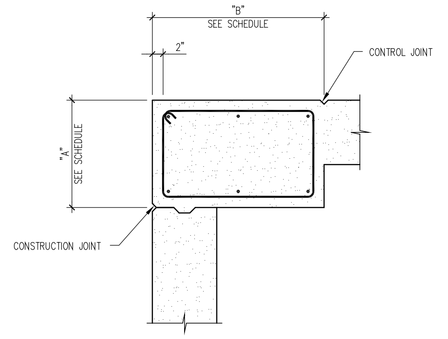

NOTE: WALL REINFORCING NOT SHOWN FOR CLARITY.

PIER DETAIL (P-4 AND P-6)

DETAIL K F201
N.T.S.

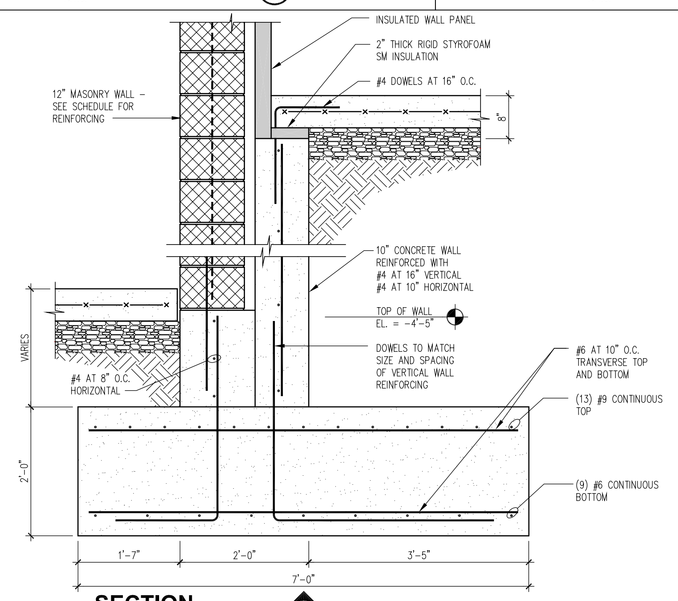

SECTION
SCALE: 3/4" = 1'-0"
F201

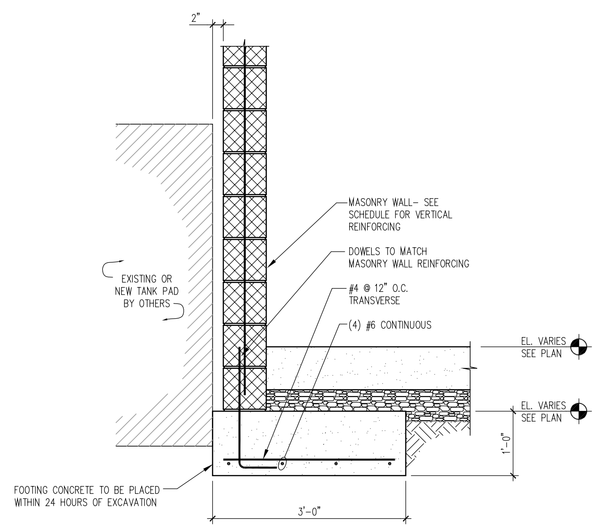

SECTION
SCALE: 3/4" = 1'-0"
F201

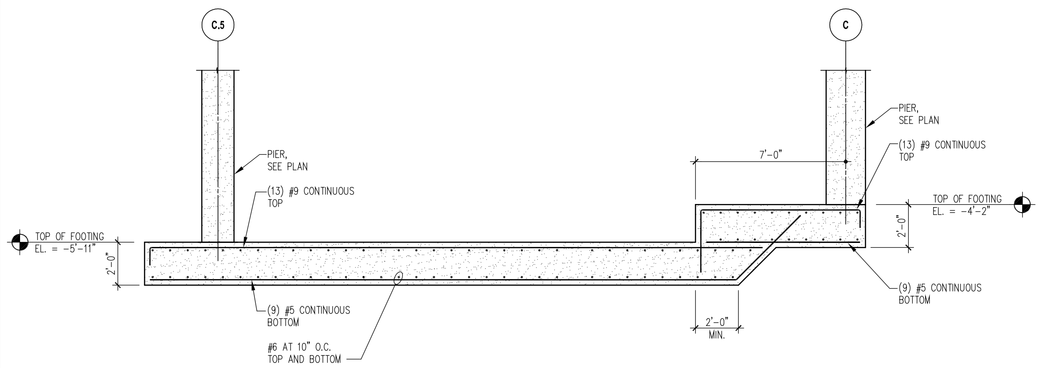

COMBINED FOOTING ELEVATION ALONG LINE 3
SCALE: 1/4" = 1'-0"

FACILITIES DESIGN

FACILITIES DESIGN, INC.
3904 Abel Drive
Columbia, Pennsylvania 17512
Phone: (717) 285–9442
Fax: (717) 285–3102
Email: info@facilitiesdesign.com
Web: www.facilitiesdesign.com
C.A. NUMBER: 20031118 F

Engineering Design Services
Architectural Engineering
Building
Foundation ■ Structural
Plumbing ■ HVAC ■ Fire Protection
Central Refrigeration ■ Thermal Storage
Lighting ■ Power Distribution ■ Controls
Thermal Insulation
Materials Handling

Project Services
Project Planning ■ Project Management
Master Planning
Feasibility Studies
Material Handling Systems Studies

–	–	–
–	–	–
–	–	–
–	–	–
–	–	–
–	–	–
–	–	–
–	–	–
–	–	–
0	08–29–03	ISSUED FOR BIDDING

REVISIONS

This drawing and all information contained herein, remains the property of FACILITIES DESIGN, INC. All rights are expressly reserved and this drawing may not be reproduced in whole or in part without the express written consent of FACILITIES DESIGN, INC.

Do not scale drawing. Contractor shall verify all dimensions and conditions prior to construction. Any discrepancies shall be reported to FACILITIES DESIGN, INC. prior to construction for resolution.

PROJECT MANAGER: M.S.M.
DESIGNED BY: K.A.S.
DRAWN BY: G.L.B.
CHECKED BY: R.G.C.
SEAL:

PROJECT:

NEW MILK COOLER

Oakhurst® DAIRY

364 FORREST AVENUE
PORTLAND, MAINE 04101

PROJECT NUMBER: **2003.1141.0**

DATE: **AUGUST 29, 2003**

DRAWING TITLE: **FOUNDATION DETAILS**

DRAWING NUMBER: **F201**
REVISION: **0**

F:\DATA\2003\1141\dwg\STRUCT\1141 F201.dwg, 09/29/2003 10:22:24 PM, GLB