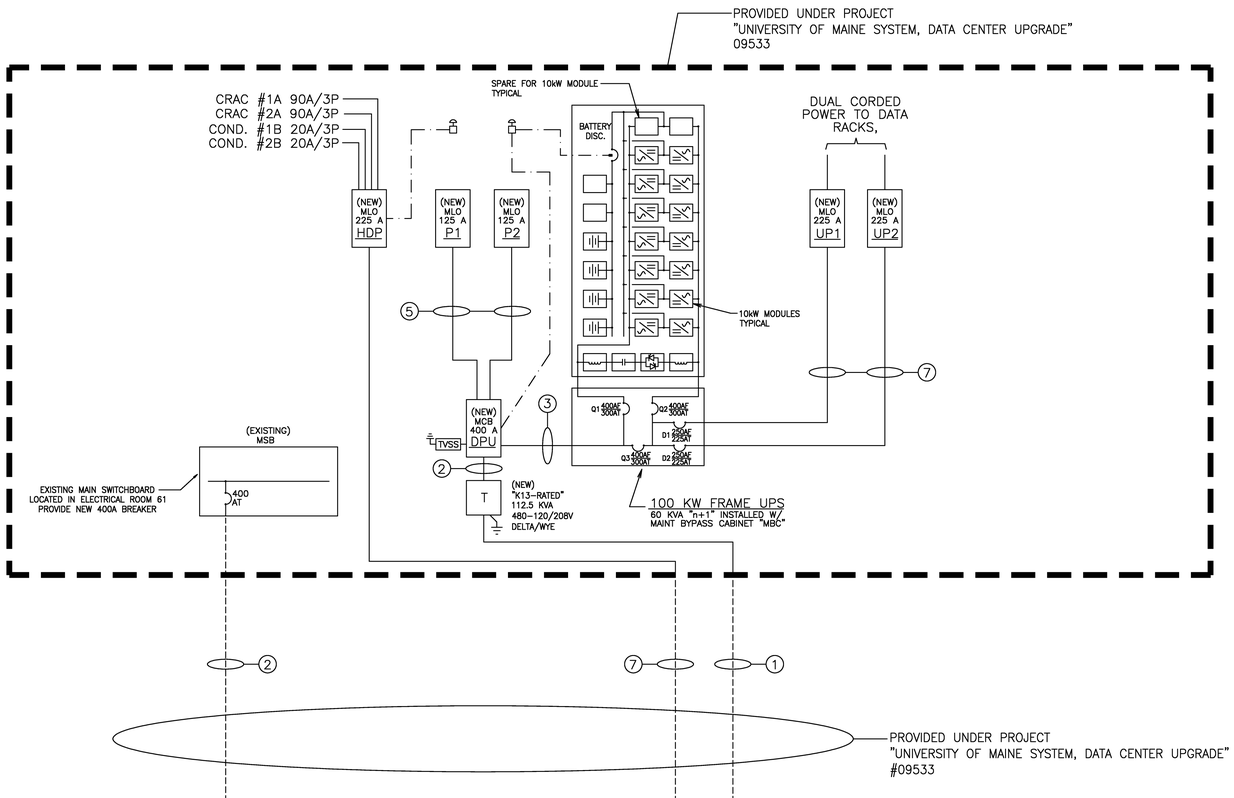

FEEDER SIZE KEY NOTES (BOTH FOR 09533 AND 10633 PROJECTS)

1. PROVIDE 3-#4/0 AND 1-#4 GND IN 2-1/2" CONDUIT.
2. PROVIDE 4-600kCMIL AND 1-#3 GND IN 4" CONDUIT.
3. PROVIDE 4-#500kCMIL AND 1-#3 GND IN 3-1/2" CONDUIT.
4. PROVIDE 4-#4 AND 1-#8 GND IN 1-1/2" CONDUIT.
5. PROVIDE 4-#1 AND 1-#6 GND IN 2" CONDUIT.
6. PROVIDE 3-#8 AND 1-#8 GND IN 3/4" CONDUIT.
7. PROVIDE 4-#4/0 AND 1-#4 GND IN 2-1/2" CONDUIT.
8. PROVIDE 3-#4 AND 1-#8 GND IN 1" CONDUIT.

09533 UNIVERSITY OF MAINE SYSTEM, DATA CENTER UPGRADE			A2
NO SCALE		REF: NA	

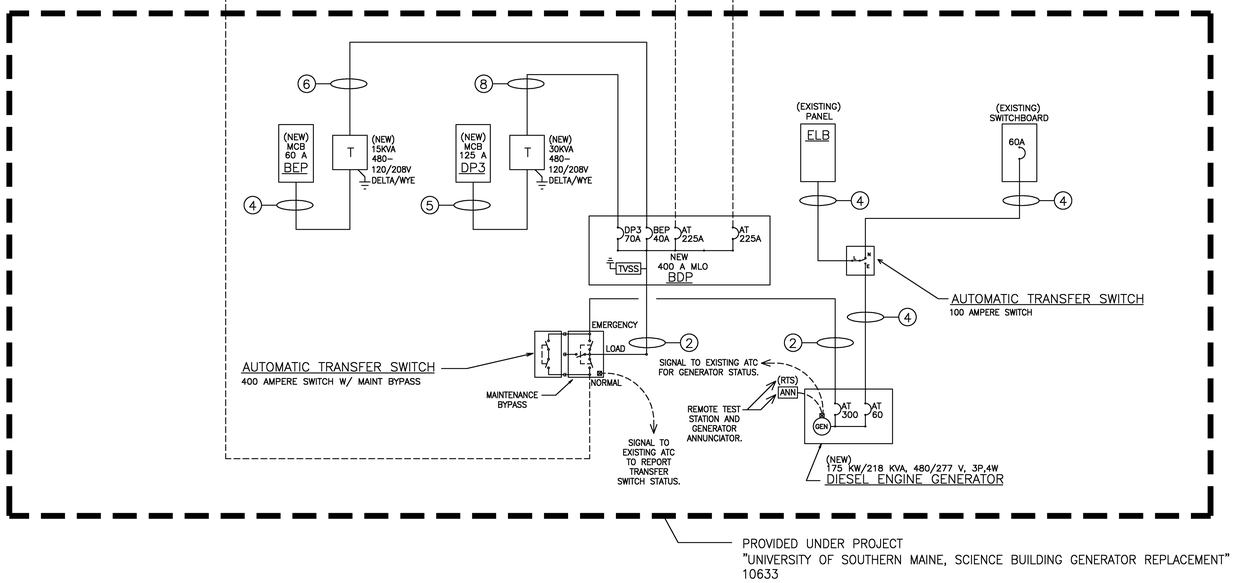

10633 USM, SCIENCE BUILDING, GENERATOR REPLACEMENT			A1
NO SCALE		REF: NA	

HARRIMAN
Architects + Engineers
65 Harriman Drive
Auburn, ME 04210
207.784.5100 tel
Middle Street
Portland, ME 04101
207.775.6053 tel
One Perimeter Road
Manchester, NH 03103
603.626.1242 tel
www.harriman.com

© 2011

STATE OF MAINE
PHILIP R. MORRISSETTE
No. 3917
LICENSED
PROFESSIONAL ENGINEER

Project Title

UNIVERSITY OF MAINE SYSTEM DATA CENTER UPGRADES

Portland, Maine

HA Project No. 09533

Key Plan

Mark	Date	Description
	05-09-2011	ISSUED FOR BID
	04-05-2011	ISSUED FOR 100% REVIEW
	01-24-2011	ISSUED FOR 75% REVIEW

Issue Dates

Drawing Status

Drawing Title

ELECTRICAL ONE-LINE DIAGRAM

PA / PE: PRM

Drawn By: RJB

Drawing Number

E50.1