NOTE:

CONNECT TO EXISTING PIPING AT SPRINKLER HEAD BEING REMOVED. EXTEND EXISTING PIPING TO NEW SPRINKLER HEAD LOCATION. HYDRAULICALLY VERIFY CAPACITY OF PIPE FOR EXTENSION TO MULTIPLE SPRINKLER HEADS. TAP OFF MAIN IF NECESSARY.

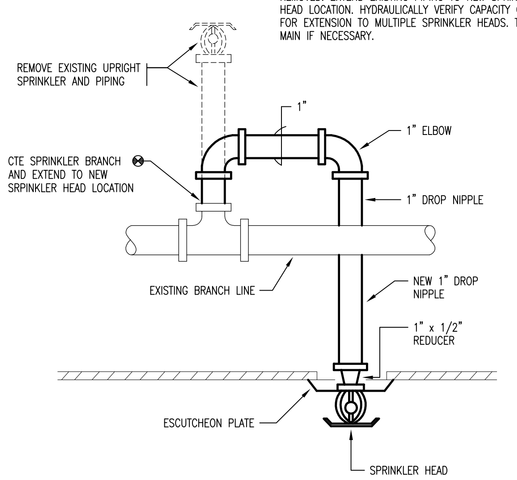

1 SPRINKLER HEAD ARM OVER DETAIL

SCALE: N.T.S.

NOTE:

CONNECT TO EXISTING PIPING AT SPRINKLER HEAD BEING REMOVED. EXTEND EXISTING PIPING TO NEW SPRINKLER HEAD LOCATION. HYDRAULICALLY VERIFY CAPACITY OF PIPE FOR EXTENSION TO MULTIPLE SPRINKLER HEADS. TAP OFF MAIN IF NECESSARY.

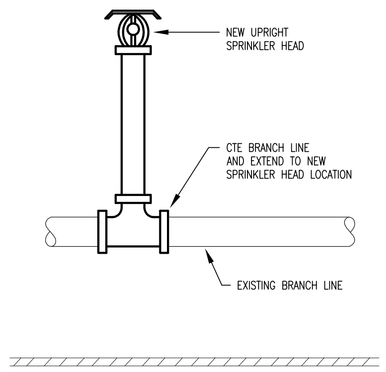

2 NEW UPRIGHT SPRINKLER HEAD

SCALE: N.T.S.

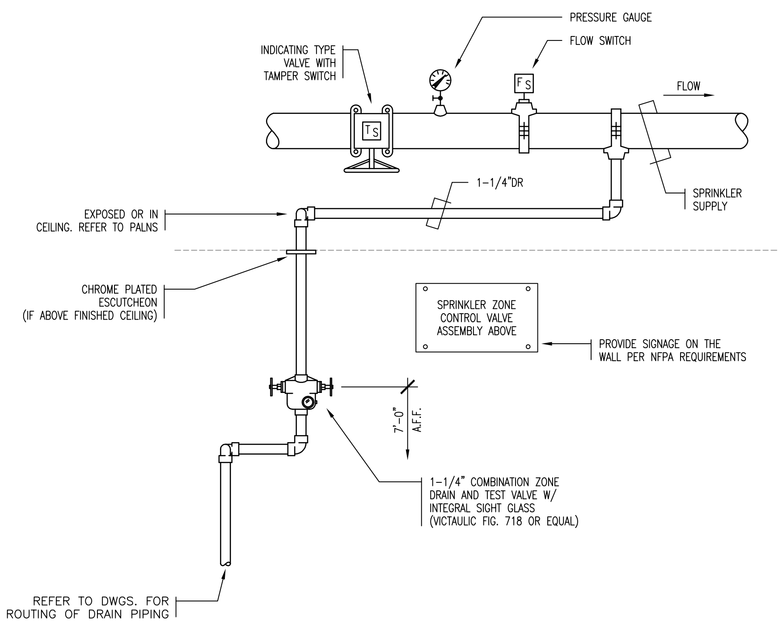

3 FLOOR CONTROL VALVE ASSEMBLY

SCALE: N.T.S.

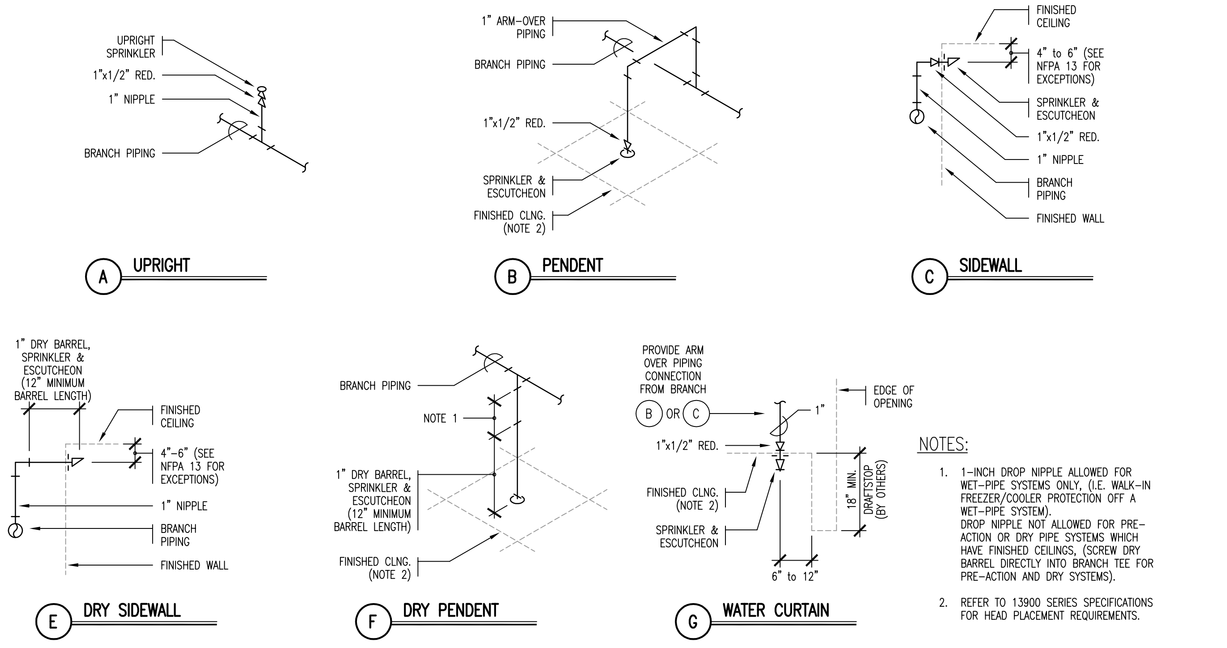

NOTES:

1. 1-INCH DROP NIPPLE ALLOWED FOR WET-PIPE SYSTEMS ONLY, (I.E. WALK-IN FREEZER/COOLER PROTECTION OFF A WET-PIPE SYSTEM). DROP NIPPLE NOT ALLOWED FOR PRE-ACTION OR DRY PIPE SYSTEMS WHICH HAVE FINISHED CEILINGS, (SCREW DRY BARREL DIRECTLY INTO BRANCH TEE FOR PRE-ACTION AND DRY SYSTEMS).
2. REFER TO 13900 SERIES SPECIFICATIONS FOR HEAD PLACEMENT REQUIREMENTS.

4 TYPICAL SPRINKLER HEAD PIPING DETAILS

SCALE: N.T.S.

GENERAL PIPING ABBREVIATIONS:

AFF	ABOVE FINISHED FLOOR
AFG	ABOVE FINISHED GRADE
AP	ACCESS PANEL
BFP	BACKFLOW PREVENTER
BOP	BOTTOM OF PIPE
CI	CAST IRON
CL	CENTERLINE
CONN	CONNECT
CONT	CONTINUATION
CTE	CONNECT TO EXISTING
CC	CENTER TO CENTER
DIA	DIAMETER
DN	DOWN
DWG	DRAWING
DV	DRAIN VALVE
ELEV	ELEVATION
ELEC	ELECTRIC
ETBA	EXISTING TO BE ABANDONED
ETR	EXISTING TO REMAIN
ETBR	EXISTING TO BE REMOVED
GAL	GALLONS
GPM	GALLONS PER MINUTE
HVAC	HEATING, VENTILATION AND AIR CONDITIONING
IN	INCHES
MAX	MAXIMUM
MIN	MINIMUM
NC	NORMALLY CLOSED
NIC	NOT IN CONTRACT
No.	NUMBER
OC	ON CENTER
PRV	PRESSURE REGULATOR VALVE
RED	REDUCER
RV	RELIEF VALVE
SCH	SCHEDULE
SS	STAINLESS STEEL
TYP	TYPICAL
W/	WITH
WTS	WATER TIGHT SEAL

FIRE PROTECTION ABBREVIATIONS:

DCVA	DOUBLE CHECK VALVE ASSEMBLY
DR	DRAIN PIPING
F	FIRE SERVICE
FCVA	FLOOR CONTROL VALVE ASSEMBLY
FDC	FIRE DEPARTMENT CONNECTION
FDVC	FIRE DEPARTMENT VALVE CABINET
FHC	FIRE HOSE CABINET
FP	COMBINATION FIRE PROTECTION
ITS	INSPECTOR'S TEST STATION
PIV	POST INDICATOR VALVE
SACV	SPRINKLER ALARM CHECK VALVE
SP	STANDPIPE
SPK	SPRINKLER
WIV	WALL INDICATING VALVE

FIRE PROTECTION GENERAL NOTES

1. THE FIRE PROTECTION CONTRACTOR SHALL BE FAMILIAR WITH ALL CONTRACT DOCUMENTS FOR ALL TRADES AND COORDINATE WITH OTHER CONTRACTORS.
2. DRAWINGS ARE DIAGRAMMATIC ONLY, FINAL ROUTING OF PIPING AND EQUIPMENT LOCATIONS SHALL BE DETERMINED IN THE FIELD. ADDITIONAL OFFSETS, ELBOWS, ETC., SHALL BE PROVIDED AND INSTALLED WITHOUT ADDITIONAL COST TO THE OWNER.
3. THE FIRE PROTECTION CONTRACTOR SHALL COORDINATE ALL ELECTRICAL, PLUMBING & HVAC REQUIREMENTS WITH THE ELECTRICAL, PLUMBING AND HVAC CONTRACTORS.

GENERAL PIPING SYMBOLS:

Symbol	Abbrev.	Description
	DN	PIPE DOWN THROUGH FLOOR
	UP	PIPE UP THROUGH FLOOR ABOVE
		PIPE DROP
		PIPE DROP & RUN
		PIPE DROP & TURN
		BRANCH RISE
		BRANCH DROP
		ELBOW
		TEE
		CAP
		PIPE BREAK
		CONCENTRIC REDUCER
		ECCENTRIC REDUCER
		SCREWED UNION
		FLANGED UNION
		FLEXIBLE CONNECTOR
		STRAINER
		SLEEVE/GUIDE
		PRESSURE GAUGE
		SHUT-OFF VALVE
TS		OS&Y GATE VALVE W/ TAMPER SWITCH
		VALVE WITH LOCKED HANDLE
	VIV	VALVE IN VERTICAL
		RELIEF VALVE
	PRV	PRESSURE REGULATING VALVE
		BALL VALVE
		BUTTERFLY VALVE
		SOLENOID ACTUATOR
		CHECK VALVE
		FLOW ARROW
M		METER
		PITCH (REFER TO SPEC)
		PIPING LOOP
V-3		VALVE TAG
5 / FP5.1		DETAIL REFERENCE (detail no. / drawing where detail occurs)

FIRE PROTECTION SYMBOLS:

Symbol	Abbrev.	Description
DCVA	DCVA	DOUBLE CHECK VALVE ASSEMBLY
	EB	ELECTRIC BELL
	WMG	WATER MOTOR GONG
FS		FLOW SWITCH
TS		TAMPER SWITCH
PS		PRESSURE SWITCH
	FDC	FIRE DEPARTMENT CONNECTION (2-WAY)
	FDC	FIRE DEPARTMENT CONNECTION (STORZ)
	FDV	FIRE DEPARTMENT VALVE
	FDVC	FIRE DEPARTMENT VALVE CABINET
	FHC	FIRE HOSE CABINET
	FCVA	FLOOR CONTROL VALVE ASSEMBLY
		RECESSED SPRINKLER HEAD
	EC	RECESSED SPRINKLER HEAD (EXTENDED COVERAGE)
		UPRIGHT SPRINKLER HEAD
		CONCEALED SPRINKLER HEAD
		SIDEWALL SPRINKLER
1		HYDRAULIC REFERENCE POINT
DP		DRY PENDANT SPRINKLER W/ 12" MINIMUM BARREL
DS		DRY SIDEWALL SPRINKLER W/ 12" MINIMUM BARREL
1-1/2"SPK		PIPE SIZE AND SERVICE LABEL

SMMA
SYMMES MAINI & MCKEE ASSOCIATES

1000 Massachusetts Avenue
Cambridge, Massachusetts 02138
617.547.5400 Fax 617.354.5758

OWNER REVIEW

NAME	DATE

NO.	DATE	DESCRIPTION
	06.21.06	ISSUED FOR CONSTRUCTION
	05.03.06	SCOPE REVISION
C	03.22.06	100% QC REVIEW
B	03.16.06	PROGRESS PRINT
A	03.08.06	80% PROGRESS PRINT

ISSUE LOG

△ = CLOUDED CHANGE

UNIVERSITY OF SOUTHERN MAINE
70 FALMOUTH STREET
PORTLAND, MAINE

LEGEND, NOTES AND DETAILS

SCALE	NTS
DRAWN BY	MVR
CHECKED BY	
PROJ. ARCH. / ENGR.	MD/TGW
PROJ. MGR.	LG
JOB NO.	03049.10

© SYMMES, MAINI & MCKEE ASSOCIATES, INC. 2004

FP0.01