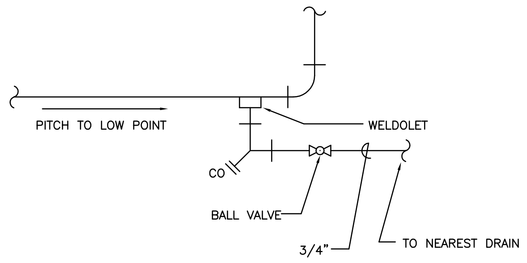

1 LOW POINT DRAIN DETAIL

SCALE: NONE

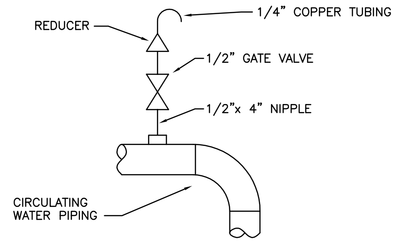

NOTES:

1. VENT ALL HIGH POINTS INDICATED ABOVE.
2. IF AUTOMATIC AIR VENTS ARE USED, PIPE DISCHARGE TO DRAIN.

2 TYPICAL AIR VENT

SCALE: NONE

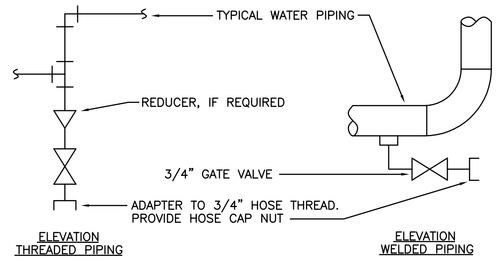

NOTES:

1. DRAIN ALL LOW POINTS AS INDICATED ABOVE.
2. WHERE SCALE POCKETS ARE SHOWN ON PIPE RISER DIAGRAMS AND/OR PLANS, LOCATE DRAIN AT BOTTOM OF SCALE POCKET.

DESIGNER'S NOTE:

SHOW SCALE POCKETS ON MAJOR CIRCULATING WATER PIPING RISER DIAGRAMS AND/OR PLANS.

3 TYPICAL CHILLED AND HOT WATER PIPING DRAIN VALVE CONNECTIONS

SCALE: NONE

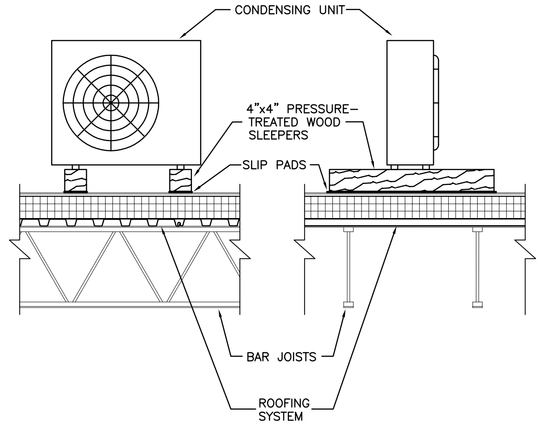

NOTE:

1. SLEEPERS SHALL STRADDLE TWO BAR JOISTS.
2. FASTEN UNIT TO WOOD SLEEPERS.

4 CONDENSING UNIT MOUNTING DETAIL

SCALE: NONE

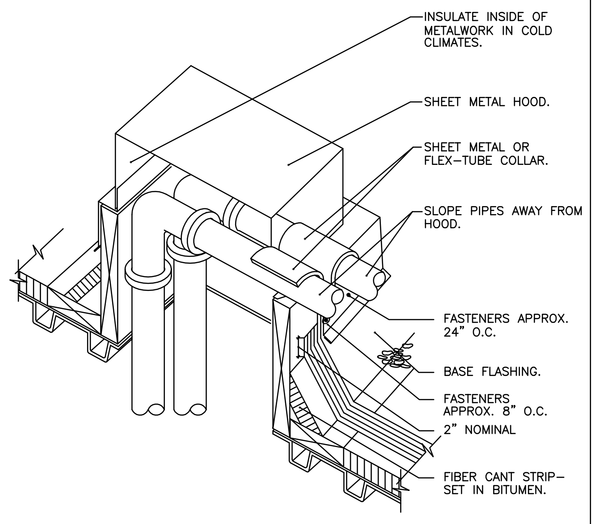

5 PIPING THRU ROOF

SCALE: NONE

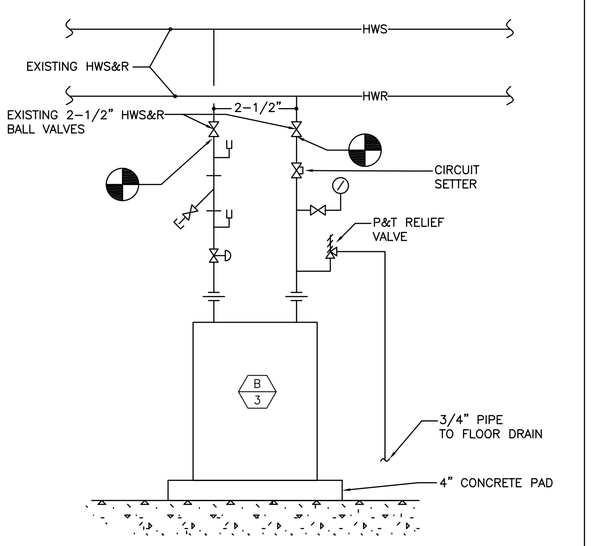

6 BOILER PIPING SCHEMATIC

SCALE: NONE

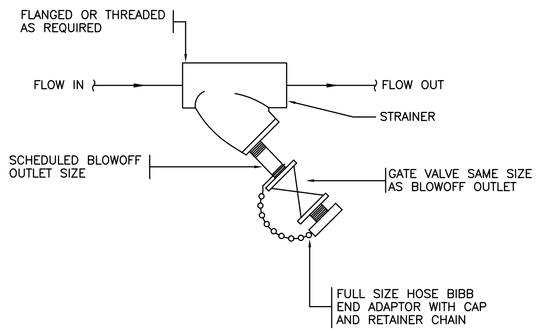

STRAINER SIZE (IN.)	BLOWOFF OUTLET MIN. SIZE (IN.)
3/4	1/2
1 TO 2 1/2	3/4
3 & 4	1
5 & ABOVE	2

7 STRAINER ASSEMBLY

SCALE: NONE

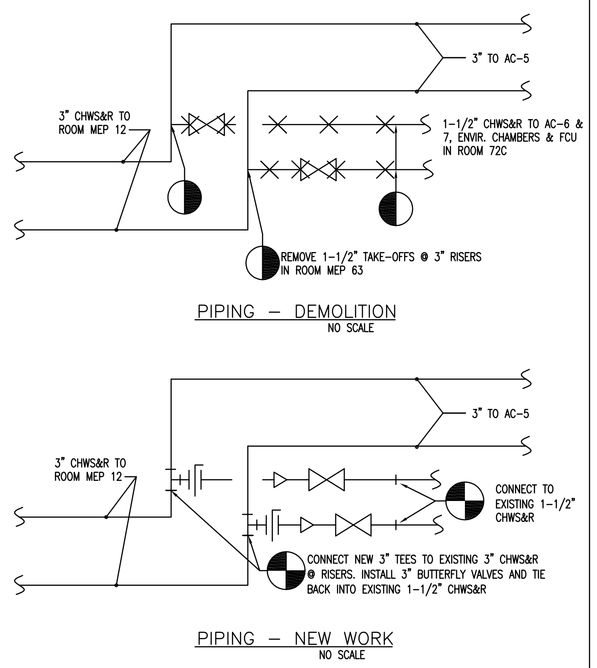

8 BASEMENT CHWS&R PIPING REVISIONS

SCALE: NONE

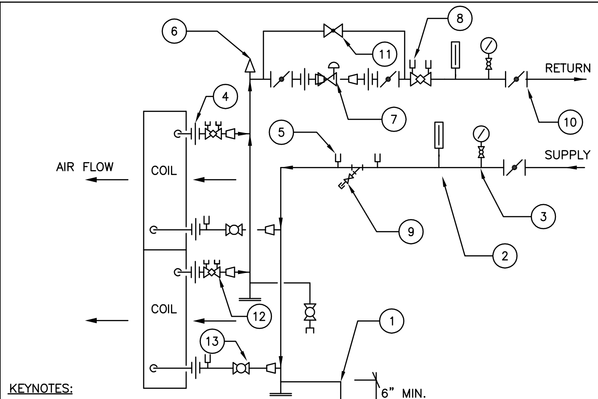

KEYNOTES:

1. 3/4" DRAIN VALVE WITH HOSE CONNECTION
2. THERMOMETER
3. PRESSURE GAUGE WITH ISOLATION VALVE
4. UNION, DIELECTRIC TYPE IF CONNECTION IS OF DISSIMILAR METALS.
5. PRESSURE TEMPERATURE TEST PLUGS.
6. MANUAL AIR VENT
7. 2- WAY CONTROL VALVE.
8. FLOW CONTROL BALANCING VALVE.
9. STRAINER WITH BLOWDOWN VALVE. PROVIDE HOSE CONNECTION & CAP.
10. BUTTERFLY OR BALL VALVE IF PIPE SIZE IS LESS THAN 3".
11. GLOBE VALVE. BY-PASS TO MATCH CONTROL VALVE SIZE.
12. COIL FLOW BALANCING VALVE
13. COIL ISOLATION VALVE

GENERAL NOTES:

A. LOCATE PIPE UNIONS AND ARRANGE PIPING TO FACILITATE COIL REMOVAL.
B. UNIONS (OR FLANGED BODY) REQUIRED TO PERMIT REMOVAL OF CONTROL VALVES.
C. PROVIDE SIMILAR PIPING ARRANGEMENTS ON EACH SIDE FOR TWO SECTION WIDE COIL ASSEMBLY.
D. SUPPLY WATER SHALL BE CONNECTED TO AIR LEAVING SIDE OF COIL.
E. RUNOUTS SHALL BE SAME SIZE AS COIL CONNECTIONS.

9 STACK COIL PIPING DETAIL WITH 2 WAY CONTROL VALVE

SCALE: NONE

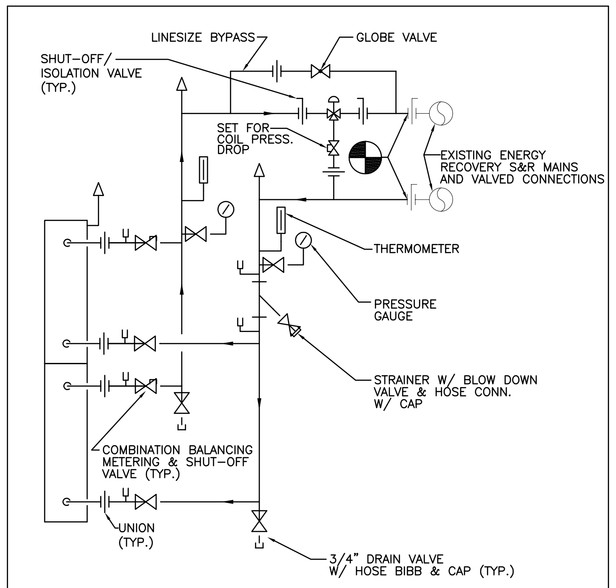

NOTES:

1. LOCATE PIPE UNIONS AND ARRANGE PIPING TO FACILITATE COIL REMOVAL.
2. UNIONS (OR FLANGED BODY) REQUIRED TO PERMIT REMOVAL OF CONTROL VALVES.
3. PROVIDE SIMILAR PIPING ARRANGEMENTS ON EACH SIDE FOR TWO SECTION WIDE COIL ASSEMBLY.
4. SEE DRAWINGS FOR TYPE OF THE CONTROL VALVE ACTUATOR.
5. RUNOUTS SHALL BE SAME SIZE AS COIL CONNECTIONS.

10 ENERGY RECOVERY COIL PIPING WITH 3-WAY VALVE

SCALE: NONE

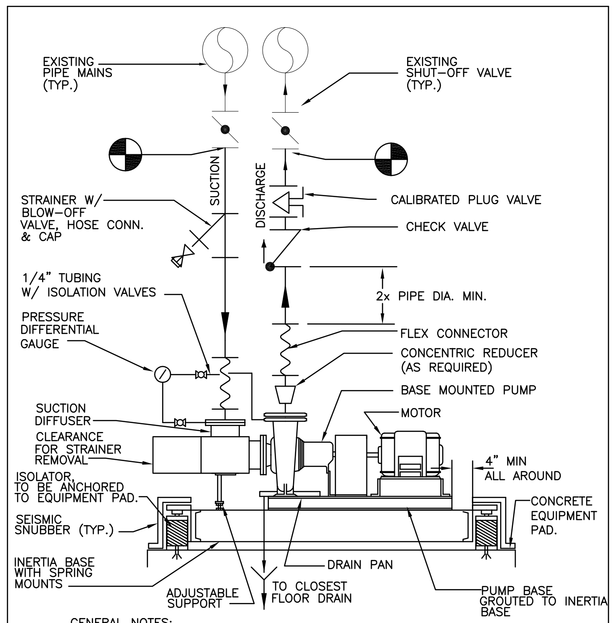

GENERAL NOTES:

A. ALL PUMPS W/O ASD TO HAVE BALANCING VALVE ON DISCHARGE. CHECK VALVE, BALANCING VALVE AND ISOLATION VALVE MAY BE SUBSTITUTED WITH "TRIPLE DUTY VALVE". TRIPLE DUTY VALVE SHALL BE BE FULL LINE SIZE AND PRESSURE DROP AT RATED FLOW SHALL NOT EXCEED 2.5 FT.WC.

11 PUMP WITH SUCTION DIFFUSER PIPING DETAIL

SCALE: NONE

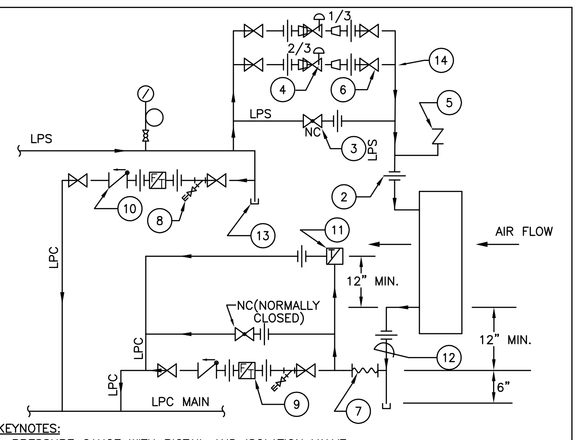

KEYNOTES:

1. PRESSURE GAUGE WITH PIGTAIL AND ISOLATION VALVE
2. UNION, DIELECTRIC TYPE IF CONNECTION IS OF DISSIMILAR METALS.
3. GLOBE VALVE. BY-PASS TO MATCH LPS MAIN SIZE.
4. 2-WAY MODULATING CONTROL VALVE.
5. 1/2"-15' VACUUM BREAKER CHECK VALVE.
6. ISOLATION VALVE, REFER TO SPECIFICATIONS FOR TYPE.
7. FLEX CONNECTION TO BE INSTALLED IN THE FIRST HORIZONTAL RUN CLOSEST TO COIL HEADER
8. STRAINER WITH BLOWDOWN VALVE. PROVIDE HOSE CONNECTION & CAP.
9. COMBINATION FLOAT AND THERMOSTATIC TRAP.
10. CHECK VALVE
11. 1" THERMOSTATIC TYPE AIR VENT
12. FULL SIZE COIL CONNECTION. REDUCE AT FLEX IF NECESSARY.
13. DRIP LEG.
14. SLOPE BACK TO PLS MAIN.

GENERAL NOTES:

A. LOCATE PIPE UNIONS AND ARRANGE PIPING TO FACILITATE COIL REMOVAL.
B. UNIONS (OR FLANGED BODY) REQUIRED TO PERMIT REMOVAL OF CONTROL VALVES.
C. INSTALL A 90° ELBOW ON THE RETURN HEADER CONNECTION DIRECTED DOWNWARD.

12 STEAM COIL CONNECTIONS ONE HIGH

SCALE: NONE

SMMA
SYMMES MAINI & MCKEE ASSOCIATES
1000 Massachusetts Avenue
Cambridge, Massachusetts 02138
617.547.5400 Fax 617.354.5758

OWNER REVIEW

NAME	DATE

NO.	DATE	DESCRIPTION
	06.21.06	ISSUED FOR CONSTRUCTION
	05.03.06	SCOPE REVISION

ISSUE LOG

△ = CLOUDED CHANGE

UNIVERSITY OF SOUTHERN MAINE
70 FALMOUTH STREET
PORTLAND, MAINE

RESEARCH WING PHASE III FIT-OUT

INFRASTRUCTURE DETAILS SHEET 4 OF 4

SCALE	AS NOTED
DRAWN BY	FV
CHECKED BY	
PROJ. ARCH. / ENGR.	GJI
PROJ. MGR.	RCH
JOB NO.	03049.10

© SYMMES, MAINI & MCKEE ASSOCIATES, INC. 2004

M5.04