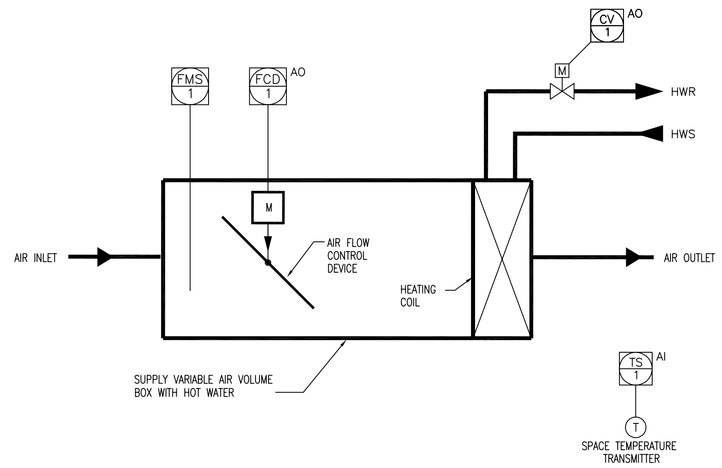

TYPICAL OFFICE SUPPLY VARIABLE AIR VOLUME BOX (VAV) CONTROL DETAIL

1

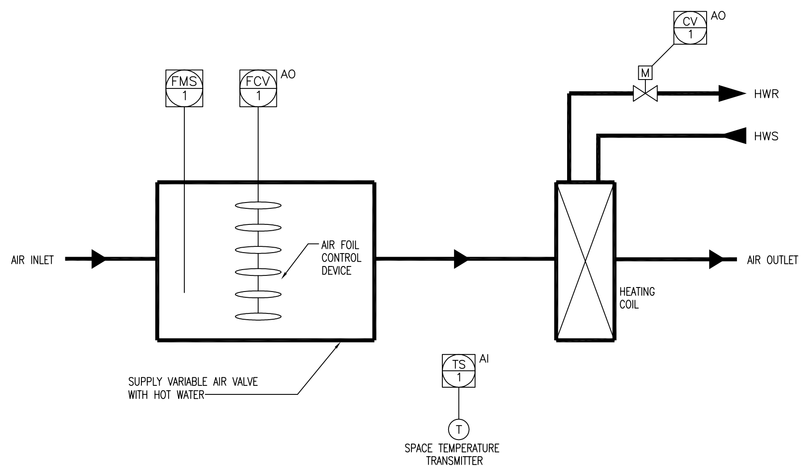

TYPICAL LABORATORY SUPPLY AIR VALVE CONTROL DETAIL

2

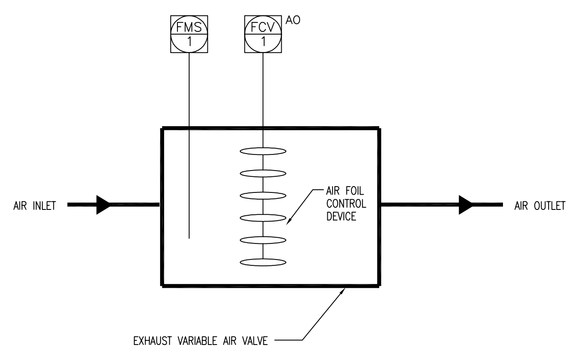

TYPICAL LABORATORY/OFFICE EXHAUST AIR VALVE CONTROL DETAIL

3

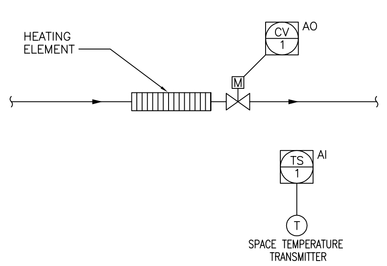

TYPICAL FTR/CC/RHP CONTROL DIAGRAM

4

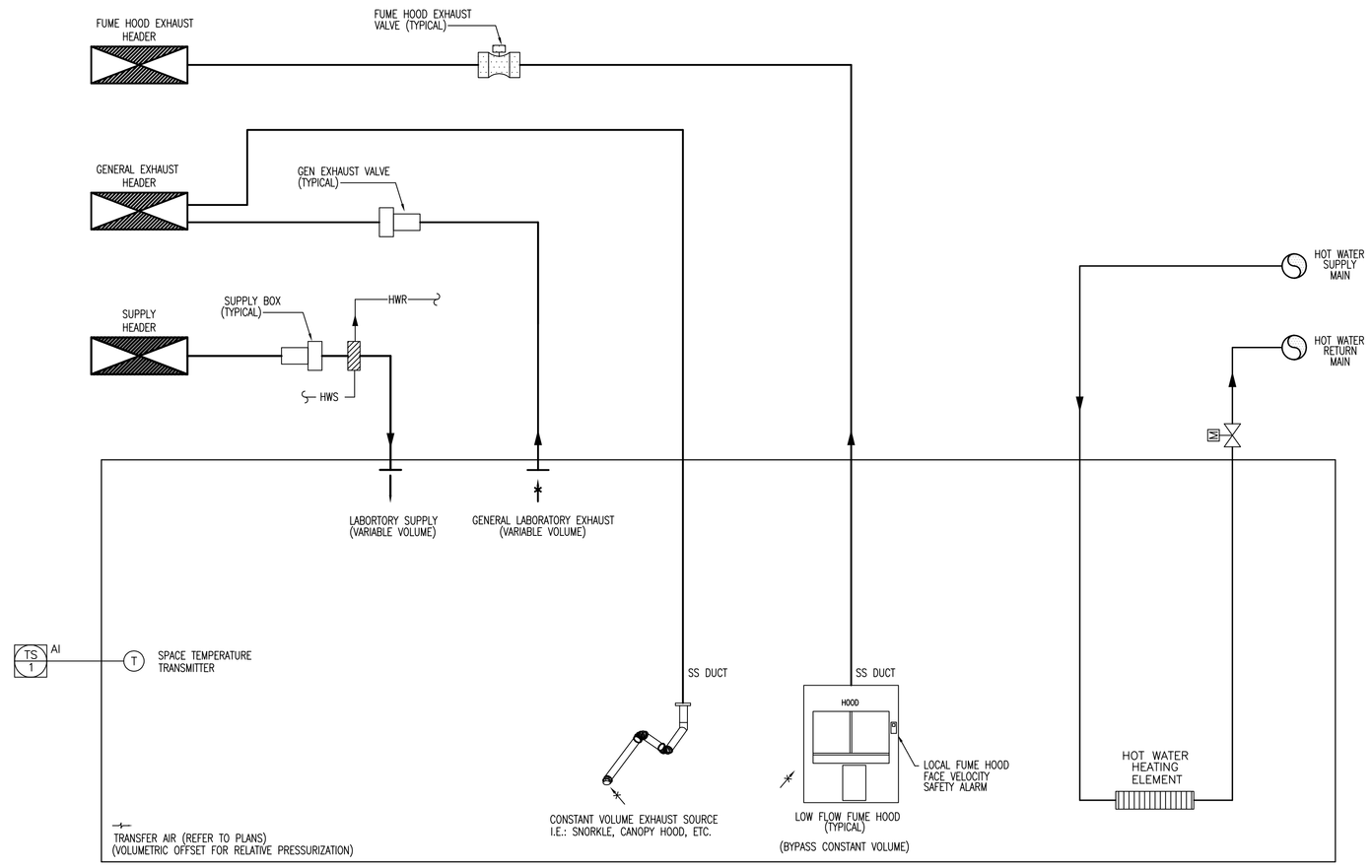

TYPICAL LABORATORY CONTROL

5

SMMA
SYMMES MAINI & McKEE ASSOCIATES
1000 Massachusetts Avenue
Cambridge, Massachusetts 02138
617.547.5400 Fax 617.354.5758

OWNER REVIEW

NAME	DATE

NO.	DATE	DESCRIPTION
	06.21.06	ISSUED FOR CONSTRUCTION
	05.03.06	SCOPE REVISION

ISSUE LOG

△ = CLOUDED CHANGE

UNIVERSITY OF SOUTHERN MAINE
70 FALMOUTH STREET
PORTLAND, MAINE

RESEARCH WING
PHASE III FIT-OUT

CONTROL DIAGRAMS

SCALE	AS NOTED
DRAWN BY	GI
CHECKED BY	
PROJ. ARCH. / ENGR.	GI
PROJ. MGR.	RCH
JOB NO..	03049.10

© SYMMES, MAINI & MCKEE ASSOCIATES, INC. 2004

M3.02