ABV	ABOVE	FIXT	FIXTURE	PLT	PLATE
ACP	ACOUSTICAL CEILING PANEL	FLR	FLOOR	PLY	PLYWOOD
ADD	ADDENDUM	FNDN	FOUNDATION	PM	PRESSED METAL
AFF	ABOVE FINISHED FLOOR	FOC	FACE OF CONCRETE	PMU	PUMICE MASONRY UNIT
AHU	AIR HANDLING UNIT	FOM	FACE OF MASONRY	PNT(D)	PAINT(ED)
ALT	ALTERNATE	FOS	FACE OF STUDS	PR	PAIR
ALUM	ALUMINUM	FP	FIREPROOF(ING)	PSF	POUNDS PER SQUARE FOOT
APPROX	APPROXIMATE	FTG	FOOTING	PSI	POUNDS PER SQUARE INCH
ARCH	ARCHITECT(URAL)	FV	FIELD VERIFY	PT	POINT
BIT	BITUMINOUS	GA	GAUGE	PTN	PARTITION
BLDG	BUILDING	GALV	GALVANIZED	QT	QUARRY TILE
BOT	BOTTOM	GC	GENERAL CONTRACTOR	R	RISER
BRK	BRICK	GFCMU	GROUND FACE CMU	RA	RETURN AIR
BSMT	BASEMENT	GL	GLASS, GLAZING	RAD	RADIUS
BUR	BUILT UP ROOF	GWB	GYPSUM WALLBOARD	RB	RESILIENT BASE
CFMF	COLD-FORMED METAL FRAMING	H/C	HANDICAP(PED)	RD	ROOF DRAIN
			HIGH	REINF	REINFORCE(D), REINFORCING
CJT	CONTROL JOINT	HDWR	HARDWARE	REF	REFERENCE
CLG	CEILING	HM	HOLLOW METAL	REQD	REQUIRED
CLOS	CLOSET	HORZ	HORIZONTAL	RES	RESILIENT
CMU	CONCRETE MASONRY UNIT	HT	HEIGHT	RET	RETURN
COL	COLUMN	HVAC	HEATING, VENTILATING, AND AIR CONDITIONING	REV	REVISION
CONC	CONCRETE			RM	ROOM
CONF	CONFERENCE	ID	INSIDE DIAMETER	RO	ROUGH OPENING
CONST	CONSTRUCTION	INCL	INCLUDE(D), INCLUDING	RR	RIBBED RUBBER
CONT	CONTINUOUS	INFO	INFORMATION	RT	RUBBER TILE
CONTR	CONTRACTOR	INS	INSULATE, INSULATION	SCH	SCHEDULE
CORR	CORRIDOR	INT	INTERIOR	SECT	SECTION
CPT	CARPET	JC	JANITOR'S CLOSET	SF	SQUARE FOOT
CRS	COURSE(S)	JT	JOINT	SFF	SPECIAL FLOOR FINISH
CT	CERAMIC TILE	KIT	KITCHEN	SHR	SHOWER
CSMU	CAST STONE MASONRY UNIT		LENGTH/LONG	SIM	SIMILAR
DET	DETAIL	LAB	LABORATORY	SPEC(S)	SPECIFICATION(S)
DF	DRINKING FOUNTAIN	LAM	LAMINATE(D)	SQ	SQUARE
DIAM	DIAMETER	LAV	LAVATORY	STC	SOUND TRANSMISSION CLASS
DIM	DIMENSION	LF	LINEAR FOOT	STD	STANDARD
DR	DOOR	LVWC	LIQUID VINYL WALL COVERING	STL	STEEL
DWG	DRAWING	MAX	MAXIMUM	STOR	STORAGE
EIFS	EXTERIOR INSULATION FINISH SYSTEM	MB	MARKERBOARD	STR	STRUCTURAL
		MC	MAP CABINET	SV	SHEET VINYL
EL/ELEV	ELEVATION	MDO	MEDIUM DENSITY OVERLAY	SWC	SPECIAL WALL COVERING
EJC	EXPANSION JOINT COVER	MECH	MECHANICAL	SYM	SYMETRICAL
EJT	EXPANSION JOINT	MED	MEDIUM	SYS	SYSTEM
EL/ELEV	ELEVATION	MET	METAL	T	TREAD
ELEC	ELECTRIC(AL)	MFG	MANUFACTURING	T&G	TONGUE AND GROOVE
ELEVR	ELEVATOR	MFR	MANUFACTURER	TA	TOILET ACCESSORIES
EMER	EMERGENCY	MIN	MINIMUM	TB	TACKBOARD
EQ	EQUAL	MISC	MISCELLANEOUS	TEL	TELEPHONE
EQPT	EQUIPMENT	MO	MASONRY OPENING	TEMP	TEMPORARY
ERD	EXISTING ROOF DRAIN	MR	MOP RECEPTOR	THK	THICK(NESS)
ES	EMERGENCY SHOWER	MT(D)	MOUNT(ED)	TOM	TOP OF MASONRY
ETR	EXISTING TO REAMAIN	MTG	MOUNTING	TOS	TOP OF STEEL
EWC	ELECTRIC WATER COOLER	NIC	NOT IN CONTRACT	TPTN	TOILET PARTITION
EXG	EXISTING	NO	NOT OPERABLE	TSL	TOP OF SLAB
EXH	EXHAUST	NOM	NOMINAL	TW	TOP OF WALL
EXP	EXPANSION	NTS	NOT TO SCALE	TYP	TYPICAL
EXT	EXTERIOR	OA	OVERALL	UC	UNDERCUT
FA	FIRE ALARM	OC	ON CENTER	UON	UNLESS OTHERWISE NOTED
FB	FACE BRICK	OD	OUTSIDE DIAMETER	VCT	VINYL COMPOSITE TILE
FBO	FURNISHED BY OTHERS/OWNER	OFCI	OWNER FURSHED CONTRACTOR INSTALLED	VERT	VERTICAL
				VWB	VENTED VINYL BASE
FD	FLOOR DRAIN	OFE	OWNER FURNISHED EQUIPMENT	VWC	VINYL WALL COVERING
FE	FIRE EXTINGUISHER	OH	OVERHEAD	W/	WITH
FEC	FIRE EXTINGUISHER CABINET	OPNG	OPENING	W/O	WITHOUT
FIN	FINISH(ED)	OPP	OPPOSITE	WD	WOOD
		PLBG	PLUMBING	WPT	WORKING POINT

13 A0.01 ABBREVATIONS (FOR ARCHITECTURAL DRAWINGS ONLY.)

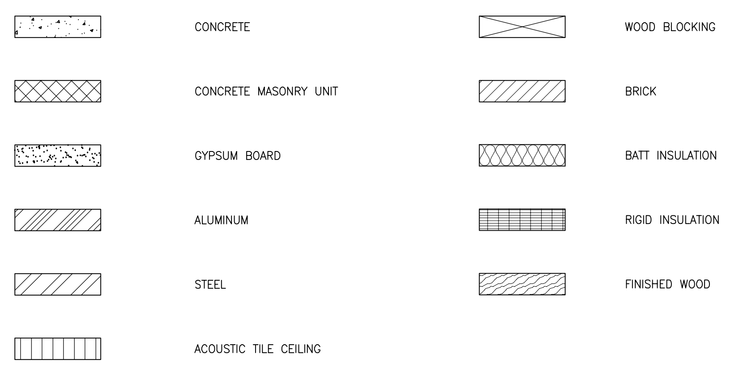

11 A0.01 MATERIAL LEGEND

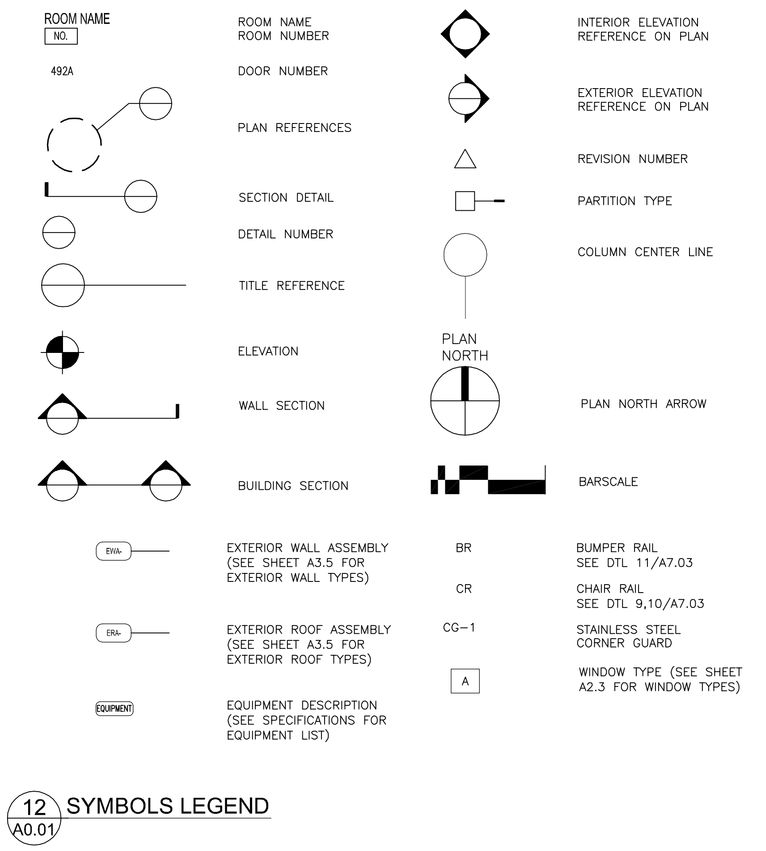

12 A0.01 SYMBOLS LEGEND

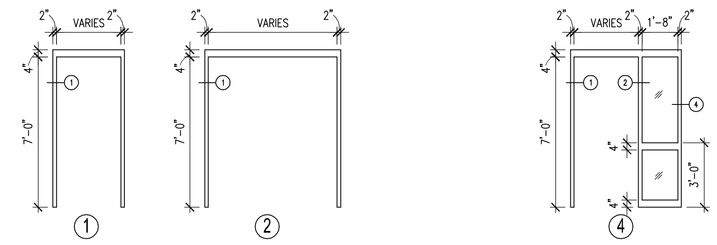

2 A0.01 HM FRAME TYPES
SCALE: 1/4" = 1'-0"

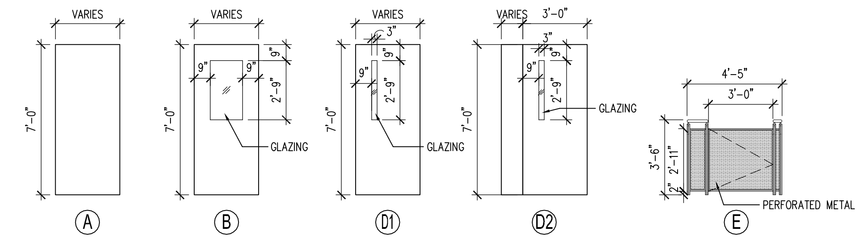

3 A0.01 DOOR TYPES
SCALE: 1/4" = 1'-0"

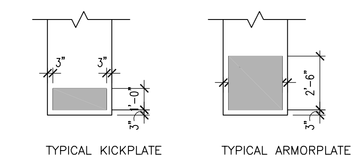

NOTE: SEE DOOR SCHEDULE FOR LOCATIONS OF KICKPLATES AND ARMORPLATES

3A A0.01 TYPICAL DOOR GUARD TYPES
SCALE: 1/4" = 1'-0"

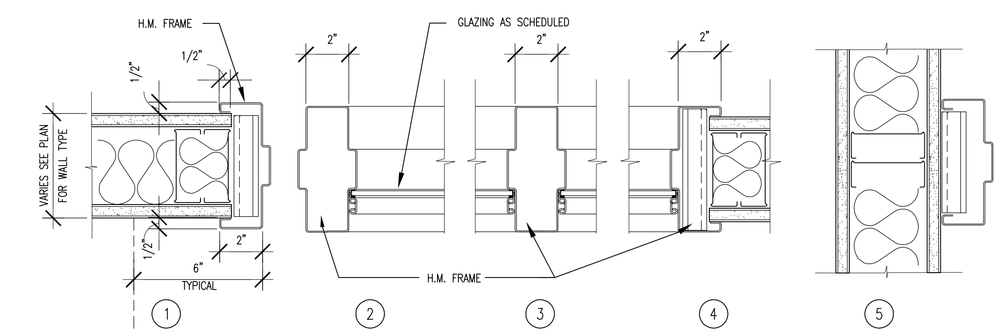

4 A0.01 DOOR DETAILS
SCALE: 3"=1'-0"

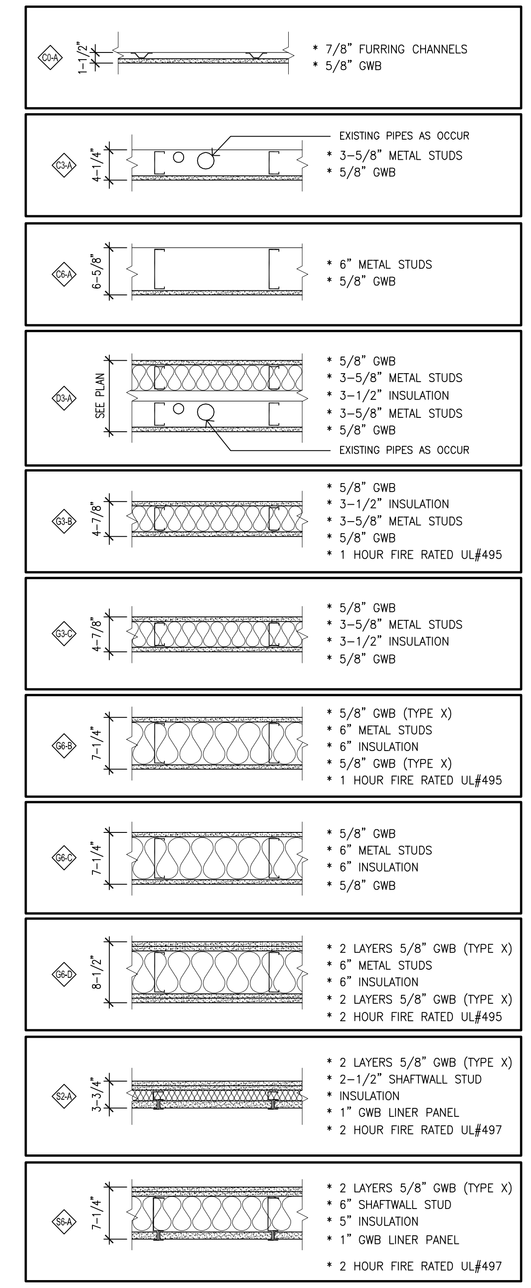

1 A0.01 PARTITION TYPES
SCALE: N.T.S.

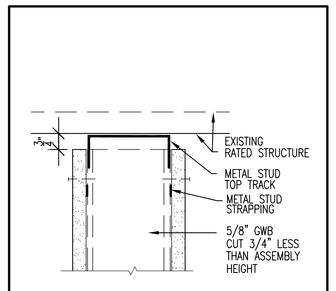

5 NON-ACOUSTICAL, NON RATED PART. HEAD
3" = 1'-0"

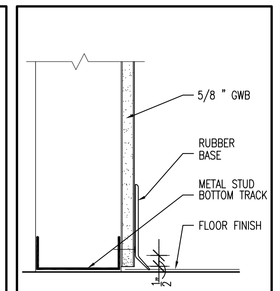

6 TYP. GWB PARTITION BASE
3" = 1'-0"

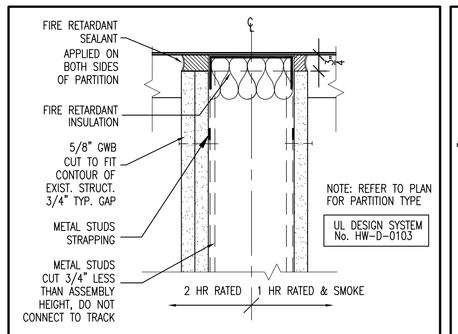

7 TYP. RATED SMOKE PART. HEAD
3" = 1'-0"

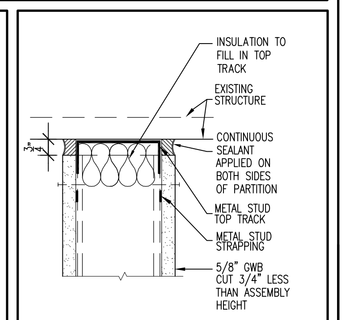

8 NON-RATED PART. HEAD, SMOKE TIGHT
3" = 1'-0"

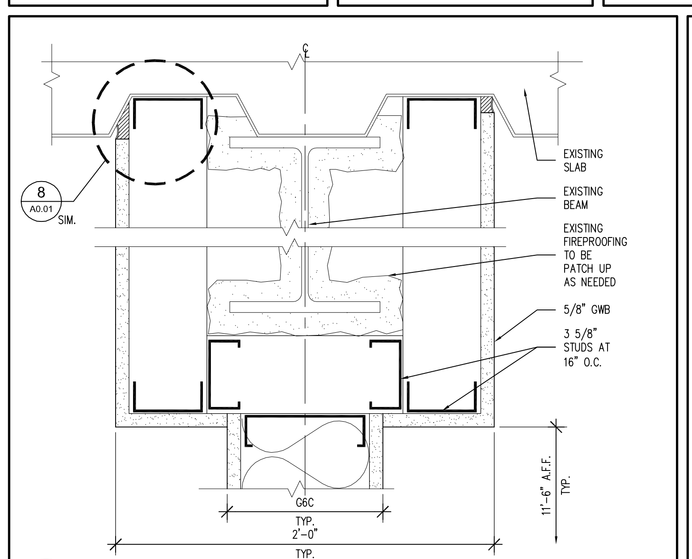

9 LAB PARTITION AT EXISTING BEAM
3" = 1'-0"

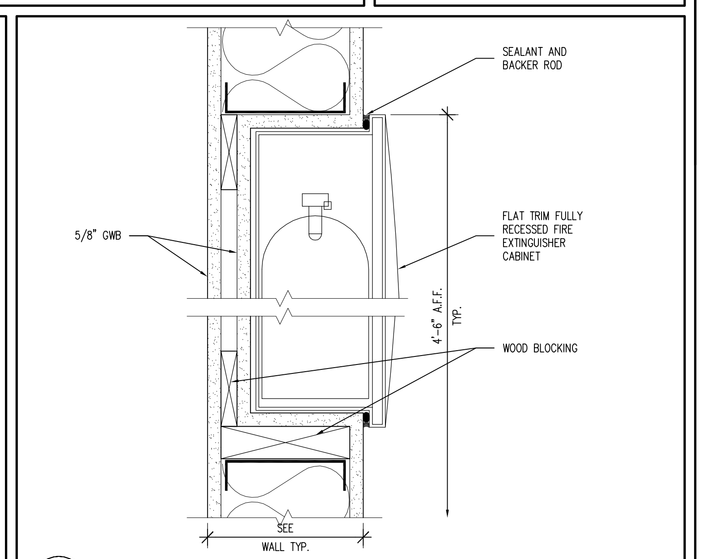

10 TYP. FIRE EXTINGUISHER CABINET
3" = 1'-0"

GENERAL NOTES:

1. ALL PARTITIONS AND PARTITION COMPONENTS TO EXTEND TO THE EXISTING STRUCTURE, AND TO BE MADE SMOKE TIGHT, UNLESS OTHERWISE NOTED.

2. REFER TO ROOM FINISH SCHEDULE AND INTERIOR ELEVATIONS FOR CERAMIC TILE NOTES, LOCATIONS, AND DETAILS.

3. ALL DIMENSIONS ON FLOOR PLANS GIVEN TO FACE OF FINISH.

4. ALL GYPSUM BOARD PARTITIONS WHETHER EXPOSED TO VIEW OR NOT SHALL HAVE CONTROL JOINTS. SEE SPECS. FOR TYPICAL SPACING.

5. G.C. TO PROVIDE AND INSTALL ALL CONCRETE PADS FOR ALL MECHANICAL, ELECTRICAL AND PLUMBING EQUIPMENT. G.C. TO COORDINATE WITH SHOP DRAWINGS FOR DIMENSIONS.

6. REFER TO SPECS FOR BOARD TYPE TO BE USED BEHIND ALL AREAS WITH CERAMIC TILE AND/OR CERAMIC TILE WAINSCOTING, REFER TO ROOM FINISH SCHEDULE AND INTERIOR ELEVATIONS FOR CERAMIC TILE LOCATION.

7. COMPLETELY SURROUND RECESSED EQUIPMENT AND DEVICES IN RATED WALLS W/ A RATED ENCLOSURE AS REQUIRED TO MAINTAIN RATING.

8. REFER TO CODE SUMMARY SHEET A0.02 FOR PARTITION RATINGS & CODE INFORMATION.

9. PROVIDE FOR WOOD BLOCKING FOR ALL WALL MOUNTED EQUIPMENT NOTED ON INTERIOR ELEVATIONS.

SMMA
SYMMES MAINI & MCKEE ASSOCIATES
1000 Massachusetts Avenue
Cambridge, Massachusetts 02138
617.547.5400 Fax 617.354.5758

OWNER REVIEW

NAME	DATE

NO.	DATE	DESCRIPTION
	06.21.06	ISSUED FOR CONSTRUCTION
	05.03.06	SCOPE REVISION
	03.22.06	100% QC REVIEW
B	03.16.06	PROGRESS PRINT
A	03.08.06	80% PROGRESS PRINT

ISSUE LOG
△ = CLOUDED CHANGE

UNIVERSITY OF SOUTHERN MAINE
70 FALMOUTH STREET
PORTLAND, MAINE

RESEARCH WING PHASE III FIT-OUT

ABBREVIATIONS, SYMBOLS, DOOR AND WALL TYPES

SCALE	AS NOTED
DRAWN BY	MD/GAK
CHECKED BY	
PROJ. ARCH. / ENGR.	MD
PROJ. MGR.	RCH
JOB NO.	03049.10

© SYMMES, MAINI & MCKEE ASSOCIATES, INC. 2004

A0.01