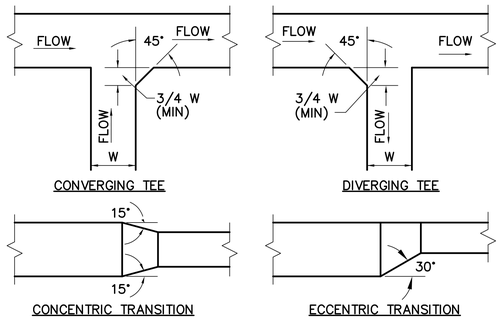

1 M-501 RECTANGULAR DUCT TRANSITIONS DETAIL
NOT TO SCALE

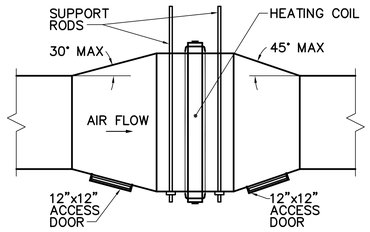

2 M-501 DUCT MOUNTED HEATING COIL DETAIL
NOT TO SCALE

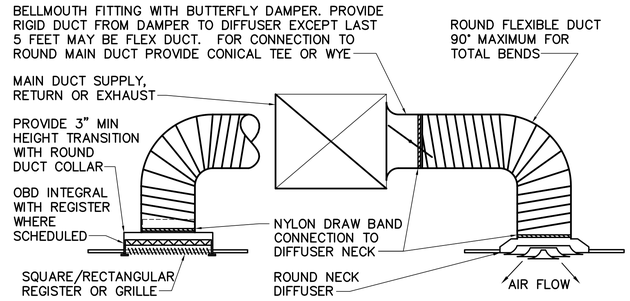

3 M-501 DIFFUSER AND REGISTER RUNOUT DETAIL
NOT TO SCALE

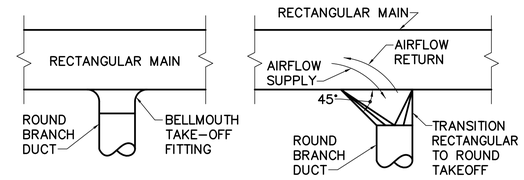

NOTE
1. SPIN-IN TYPE STRAIGHT TAKE-OFF FITTINGS SHALL NOT BE PERMITTED.

4 M-501 TYPICAL ROUND BRANCH DUCT CONNECTIONS TO RECTANGULAR MAIN
NOT TO SCALE

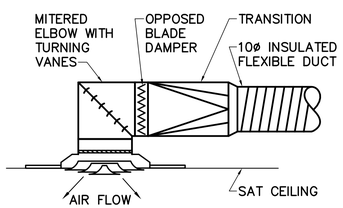

5 M-501 S-2 SUPPLY DIFFUSER DETAIL
NOT TO SCALE

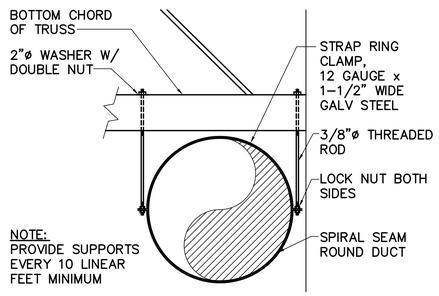

NOTE:
PROVIDE SUPPORTS EVERY 10 LINEAR FEET MINIMUM

6 M-501 EXPOSED SPIRAL DUCT SECTION
NOT TO SCALE

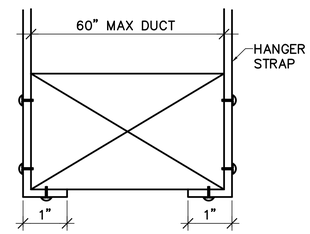

NOTE:
SIZE AND RATING OF HANGERS AND SUPPORTS SHALL BE PER LATEST SMACNA STANDARDS.

7 M-501 DUCT SUPPORT ATTACHMENTS DETAIL
NOT TO SCALE

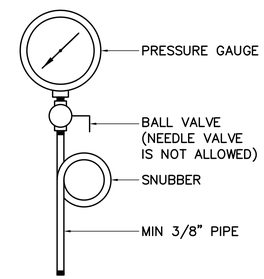

8 M-501 STEAM PRESSURE GAUGE ASSEMBLY
NOT TO SCALE

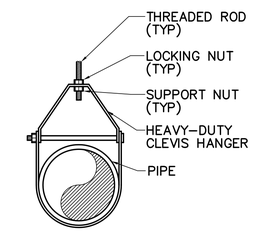

9 M-501 PIPE HANGER ATTACHMENT DETAIL
NOT TO SCALE

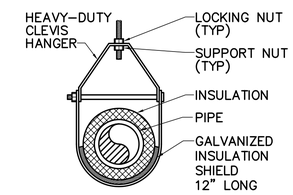

10 M-501 PIPE HANGER ATTACHMENT DETAIL
NOT TO SCALE

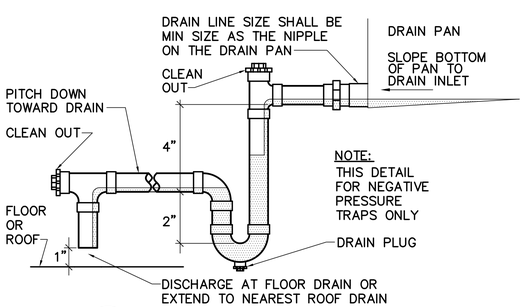

11 M-501 CONDENSATE TRAP DETAIL
NOT TO SCALE

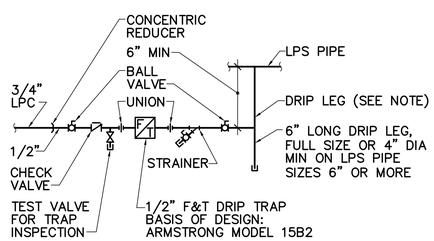

NOTES:
1. DRIP LEG OFF STEAM MAIN SHALL BE SCHEDULE 80 STEEL.

TYPICAL F&T TRAP LOW PRESSURE
12 M-501 DRIP LEG PIPING DETAIL
NOT TO SCALE

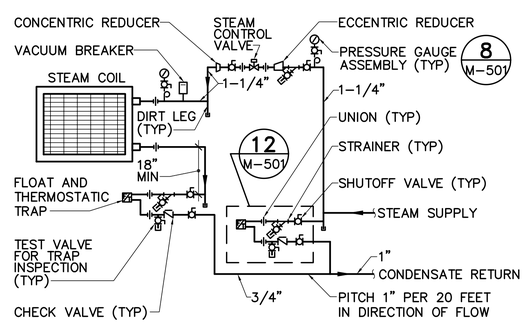

NOTE: PROVIDE TRAP FOR STEAM COIL SIZED FOR FULL LOAD (SEE SCHEDULE) AT 1/2 PSI PRESSURE DIFFERENTIAL. THE LPC PIPE FROM THE COIL SHALL BE THE LARGER OF THE STEAM COIL LPC OPENING OR 3/4".

13 M-501 AHU-1 STEAM COIL PIPING SCHEMATIC
NOT TO SCALE

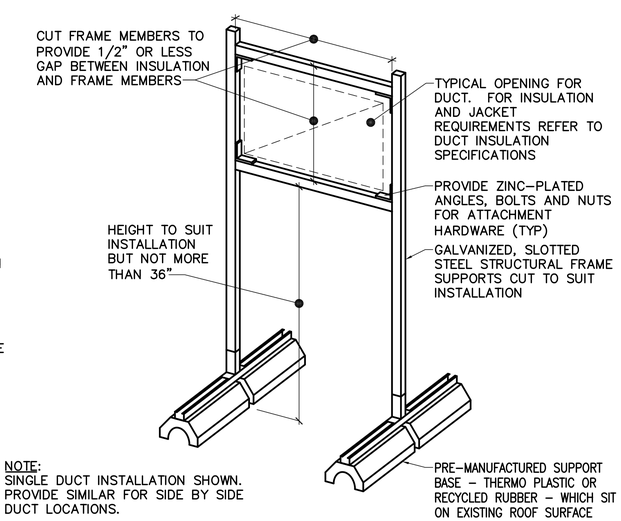

NOTE:
SINGLE DUCT INSTALLATION SHOWN. PROVIDE SIMILAR FOR SIDE BY SIDE DUCT LOCATIONS.

14 M-501 ROOF MOUNTED DUCT SUPPORT DETAIL
NOT TO SCALE

08 Jan, 2018 - 7:19pm
C:\dfile\21702.01-M501.dwg

OAK POINT ASSOCIATES
ARCHITECTURE ■ ENGINEERING ■ PLANNING
231 Main Street, Biddeford, Maine 04005 (T) 207.283.0193 (F) 207.283.
www.oakpoint

Inspections Division
Date: 03/27/18

STATE OF MAINE
RICHARD CRESWELL
No. 13178
LICENSED
PROFESSIONAL ENGINEER

DESIGNED BY: RNC
DRAWN BY: RDA
CHECKED BY: MSA
PROJECT: 21702.01

UNIVERSITY OF SOUTHERN MAINE
COLLEGE OF EDUCATION AND HUMAN DEVELOPMENT
Portland, ME 04104

LECTURE HALL RENOVATION AND UPGRADES
PAYSON SMITH HALL
96 Falmouth St. - Portland, Maine

MECHANICAL DETAILS

SCALE: AS NOTED
DATE: 01-09-18
DWG.: M-501
SHEET: 13 OF 17