SYMBOLS LEGEND

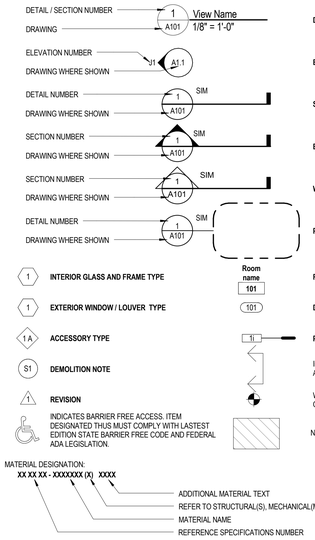

GRAPHICS LEGEND

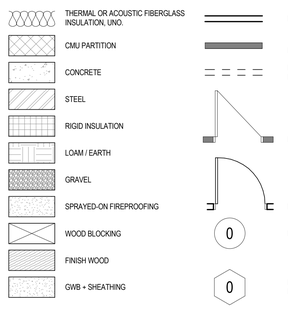

CEILING LEGEND

NOTE: SEE MECHANICAL, ELECTRICAL DRAWINGS FOR ADDITIONAL INFORMATION.
NOTE: SEE RATING PLANS FOR LOCATIONS OF RATED CEILING.

DOOR CLEARANCES

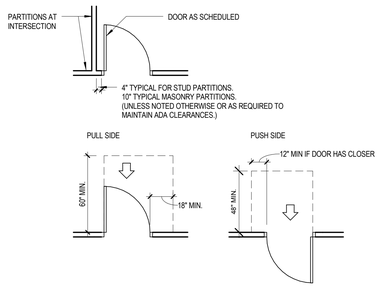

TABLE OF ABBREVIATIONS

THE FOLLOWING TABLE OF ABBREVIATIONS IS PROVIDED FOR THE CONVENIENCE OF THE CONTRACTOR. IT IS NOT INTENDED TO SERVE AS A COMPLETE LIST OF ALL ABBREVIATIONS TO BE FOUND IN THE CONTRACT DOCUMENTS. SHOULD THE CONTRACTOR REQUIRE ANY CLARIFICATION OR INTERPRETATION HEREOF, HE SHALL PROMPTLY SO NOTIFY THE ARCHITECT.

&	AND	ICB	INTEGRAL COVE BASE
∠	ANGLE	INCL	INCLUDE (ING)
@	AT	ID	INSIDE DIAMETER
℄	CENTER LINE	INSUL	INSULATION
°	DEGREES	INT	INTERIOR
'	FEET	INV	INVERT
"	INCHES	JAN	JANITOR
¢	PENNY	JT	JOINT
±	PLUS OR MINUS		
#	POUNDS, NUMBER	KD	KILN DRIED / KNOCK DOWN
P	PROPERTY LINE	KIT	KITCHEN
⌀	ROUND, DIAMETER	KO	KNOCK OUT
(T)	TEMPERED	LAV	LAVATORY
AFF	ABOVE FINISHED FLOOR	LH	LEFT HAND
AP	ACCESS PANEL	LxWxH	LENGTH x WIDTH x HEIGHT
ACT	ACOUSTICAL CEILING TILE	LT	LIGHT
AWP	ACOUSTICAL WALL PANEL	LF	LINEAR FEET
ADJ	ADJUSTABLE	MAS	MASONRY
AGG	AGGREGATE	MFR	MANUFACTURER
A/C	AIR CONDITIONING	MO	MASONRY OPENING
ALT	ALTERNATE	MB	MARKER BOARD
ALUM	ALUMINUM	MAX	MAXIMUM
AB	ANCHOR BOLT	MECH	MECHANICAL
ANOD	ANODIZED	MC	MEDICINE CABINET
APPD	APPROVED	MED	MEDIUM
ARCH	ARCHITECT (URAL)	MTL	METAL
AUTO	AUTOMATIC	MIN	MINIMUM
BSMT	BASEMENT	MISC	MISCELLANEOUS
BRG	BEARING	MR	MOISTURE RESISTANT
BP	BEARING PLATE	MLDG	MOLDING
BM	BENCH MARK	MAT	WALK OFF MAT
BIT	BITUMINOUS	NAT	NATURAL
BLKG	BLOCKING	NS	NATURAL STONE
BD	BOARD	NRC	NOISE REDUCTION COEFFICIENT
BS	BOTH SIDES	NA	NOT APPLICABLE
BOT	BOTTOM	NTS	NOT TO SCALE
BO	BOTTOM OF	NIC	NOT IN CONTRACT
BLDG	BUILDING	NO	NUMBER
BO	BY OWNER / BY OTHER	OC	ON CENTER
CAB	CABINET	OPNG	OPENING
CUH	CABINET UNIT HEATER	OPP	OPPOSITE
CPT	CARPET	OD	OUTSIDE DIAMETER
CB	CATCH BASIN	O/O	OUTSIDE TO OUTSIDE
CLG	CEILING	OA	OVERALL
CEM	CEMENT	OH	OVERHEAD
CL	CENTER LINE	OFOI	OWNER FURNISHED OWNER INSTALLED
CT	CERAMIC TILE	OFCI	OWNER FURNISHED CONTRACTOR INSTALLED
CB	CHALKBOARD	P	PAINT
CIRC	CIRCULAR	PTD	PAINTED
CLR	CLEAR	PR	PAIR
CP	COAT PEGS	PART	PARTITION
CMU	CONCRETE MASONRY UNIT	PTM	PATCH TO MATCH
CM	CONSTRUCTION MANAGER	PVMT	PAVEMENT
CJ	CONTROL JOINT	PERF	PERFORATED
CF	CUBIC FEET	PERIM	PERIMETER
CY	CUBIC YARDS	PL	PLATE
COL	COLUMN	PLAS	PLASTIC
CONC	CONCRETE	PLAM	PLASTIC LAMINATE
CONT	CONTINUOUS	PLUMB	PLUMBING
CORR	CORRUGATED	PLYWD	PLYWOOD
DEMO	DEMOLISH / DEMOLITION	PVC	POLY VINYL CHLORIDE
DTL	DETAIL	PT	PORCELAIN TILE
DIAG	DIAGONAL	PREFIN	PREFINISHED
DIA	DIAMETER	PT	PRESSURE TREATED
DIM	DIMENSION	QT	QUARRY TILE
DW	DISHWASHER	QTZ	QUARTZ TILE
DIV	DIVIDE / DIVISION	R	RADIUS
DR	DOOR	RAD	RADIUS
DBL	DOUBLE	RB	RESILIENT BASE
DN	DOWN	RF	RESILIENT FLOORING
DWG	DRAWING	REF	REFERENCE
DF	DRINKING FOUNTAIN	REFRIG	REFRIGERATOR
EA	EACH	REINF	REINFORCE
EF	EACH FACE	REQD	REQUIRED
EW	EACH WAY	REV	REVERSE
ELEC	ELECTRICAL	RH	RIGHT HAND
EP	ELECTRICAL PANEL BOARD	RD	ROOF DRAIN
EWC	ELECTRIC WATER COOLER	RM	ROOM
EL	ELEVATION	RO	ROUGH OPENING
ELEV	ELEVATOR	SC	SEALED CONCRETE
EMER	EMERGENCY	SHT	SHEET
EQ	EQUAL	SV	SHEET VINYL
EQUIP	EQUIPMENT	SIM	SIMILAR
EST	ESTIMATED	SS	SOLID SURFACE
EXH	EXHAUST	STC	SOUND TRANSMISSION COEFFICIENT
EXIST	EXISTING	SP	SPECIAL PAINT
EJ	EXPANSION JOINT	SPEC	SPECIFICATIONS / SPECIFIED
EXP	EXPOSED / EXPANSION	SQ	SQUARE
EXT	EXTERIOR	SF	SQUARE FEET
EIFS	EXTERIOR INSULATED FINISH SYSTEM	S/S	STAINLESS STEEL
F/O	FACE OF	STD	STANDARD
F/F	FACE TO FACE	STL	STEEL
FP	FACING PANEL	ST	STONE TILE
FG	FIBERGLASS	STOR	STORAGE
FIN	FINISH	STRUCT	STRUCTURAL / STRUCTURE
FF	FINISHED FLOOR	SUSP	SUSPENDED
FE	FIRE EXTINGUISHER	SYM	SYMMETRICAL
FEC	FIRE EXTINGUISHER CABINET		
FPROOF	FIRE PROOFING	TWP	TACKABLE WALL PANEL
FT	FIRE TREATED	TB	TACKBOARD
FLR	FLOOR	TEL	TELEPHONE
FD	FLOOR DRAIN	TV	TELEVISION
FLOUR	FLOURESCENT	TEMP	TEMPORARY
FAF	FLUID APPLIED FLOORING	THK	THICKNESS
FTG	FOOTING	TBD	TO BE DETERMINED
FNDN	FOUNDATION	TP	TOILET PAPER
FUT	FUTURE	T&G	TONGUE AND GROOVE
		T&B	TOP AND BOTTOM
GALV	GALVANIZED	TO	TOP OF
GA	GAUGE	TU	TOUCH UP
GC	GENERAL CONTRACTOR	TS	TRANSITION STRIP
GL	GLASS	TYP	TYPICAL
GMMB	GLASS MESH MORTAR BOARD		
GWB	GYPSUM WALL BOARD	UC	UNDERCUT
		UNO	UNLESS NOTED OTHERWISE
HDWR	HARDWARE	VB	VAPOR BARRIER
HDWD	HARDWOOD	VFY	VERIFY
HVAC	HEATING, VENTILATION & AIR CONDITIONING	VIF	VERIFY IN FIELD
		VERT	VERTICAL
HD	HEAVY DUTY	VCT	VINYL COMPOSITE TILE
HT	HEIGHT	VWC	VINYL WALLCOVERING
HC	HOLLOW CORE	WPP	WALL PROTECTION PANEL
HM	HOLLOW METAL	WC	WATER CLOSET
HORIZ	HORIZONTAL	WP	WATER PROOF
		WWF	WELDED WIRE FABRIC
		WG	WIRE GLASS
		W/	WITH
		W/O	WITHOUT
		WD	WOOD
		WVP	WOOD VENEER PANELING

GENERAL NOTES

1. ALL DIMENSIONS ARE TO FACE OF MASONRY OR FACE OF STUD, UNO.

2. ALL OPENINGS IN MASONRY CONSTRUCTION ARE DIMENSIONED TO THE FACE OF MASONRY.

3. ALL SPLAYS SHOWN ON PLANS ARE 45°, UNO.

4. REFERENCE CODE ANALYSIS KEY PLAN AND SPECIFICATIONS FOR EXTENT OF FIREPROOFING.

5. ALL EXPOSED MECHANICAL AND ELECTRICAL SERVICES IN AREAS WITHOUT CEILINGS SHALL BE CAREFULLY COORDINATED AND ORGANIZED SO AS TO PROVIDE A NEAT AND ORDERLY APPEARANCE. SERVICES SHALL BE RUN IN STRAIGHT LINES PARALLEL OR PERPENDICULAR TO EXPOSED STRUCTURE. ALL SERVICES SHALL BE RUN WITHIN OR BETWEEN EXPOSED STRUCTURE TO THE EXTENT POSSIBLE. LAYOUTS FOR PROPOSED SERVICES SHALL BE REVIEWED WITH THE ARCHITECT PRIOR TO PROCEEDING WITH THE WORK.

6. THE CONTRACTOR SHALL BE FULLY RESPONSIBLE FOR VERIFYING DIMENSIONS. ALL DISCREPENCIES BETWEEN ANTICIPATED AND ACTUAL CONDITIONS SHALL BE PROMPTLY BROUGHT TO THE ARCHITECT'S ATTENTION.

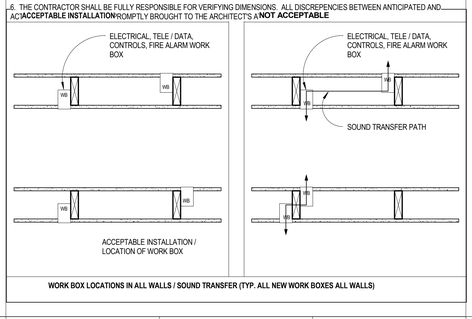

WORK BOX LOCATIONS IN ALL WALLS / SOUND TRANSFER (TYP. ALL NEW WORK BOXES ALL WALLS)

DOOR & FRAME SCHEDULE

MARK	FROM ROOM NAME	TO ROOM No.	TO ROOM NAME	DOOR SIZE WD	DOOR SIZE HT	DOOR SIZE THK	DOOR MATL	DOOR TYPE	DOOR RATING	FRAME MATL	FRAME TYPE	HARDWARE SETS	COMMENTS	REVISION
305.1	CORRIDOR	305	CHEMISTRY LAB	3' - 0"	7' - 0"	1 3/4"	WD	G	-	HM	1	1		
305.2	CORRIDOR	305	CHEMISTRY LAB	3' - 0"	7' - 0"	1 3/4"	WD	G	-	HM	1	1		
305A.1	PREP	305	CHEMISTRY LAB	3' - 0"	7' - 0"	1 3/4"	WD	G	-	HM	1	1		
305A.2	GENERAL LECTURE ROOM	305A	PREP	EXIST	EXIST	EXIST	EXIST	EXIST	-	EXIST	EXIST	1	PREP EXIST DOOR AND FRAME FOR NEW HARDWARE	
305B.1	CHEMISTRY LAB	305B	OFFICE	3' - 0"	7' - 0"	1 3/4"	WD	G	-	HM	1	3		
305C.1	CHEMISTRY LAB	305C	MECH CLOSET	3' - 0"	7' - 0"	1 3/4"	WD	F	-	HM	2	2		
305C.4	CORRIDOR	334	STAIR-2	6' - 0"	7' - 0"	1 3/4"		F				(none)		

DOOR HARDWARE SETS

SET NO.	LATCH FUNCTION	CLOSER	HINGE	STOPS	SEALS	PROTECTION	FLUSH BOLTS	ELECTRICAL	SPECIAL HARDWARE	HARDWARE BY OWNER	HARDWARE NOTES
1	CLASSROOM	-	(3) BUTT HINGES	OVERHEAD	SILENCERS	-	-	-	-	-	-
2	STORAGE	-	(3) BUTT HINGES	OVERHEAD	SILENCERS	-	-	-	-	-	-
3	OFFICE	-	(3) BUTT HINGES	WALL	SILENCERS	-	-	-	-	-	-

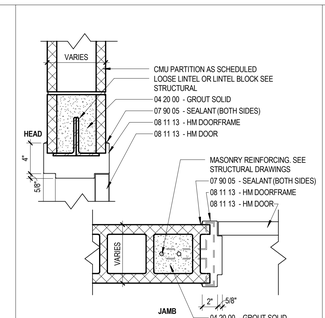

D9 A0.1 — HM FRAME HEAD and JAMB DETAILS - CMU PART
1 1/2" = 1'-0"

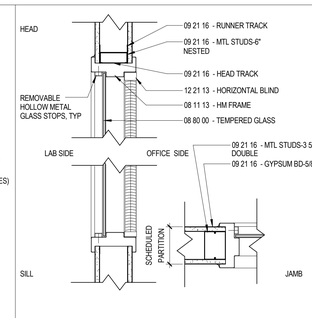

D11 A0.1 — BORROWED LITE HEAD, SILL, and JAMB DETAILS
1 1/2" = 1'-0"

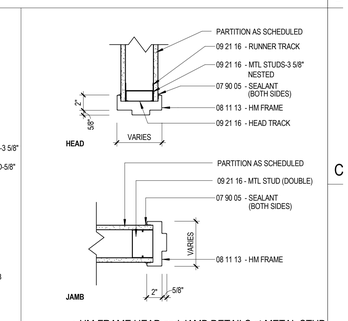

D13 A0.1 — + HM FRAME HEAD and JAMB DETAILS at METAL STUD PARTITION
1 1/2" = 1'-0"

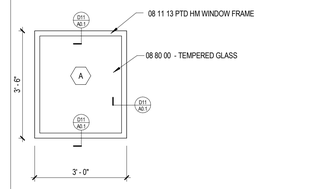

F9 A0.1 — BORROWED LITE ELEVATION
1/2" = 1'-0"

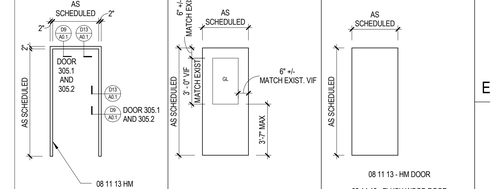

1 FRAME TYPE 1 — 1/4" = 1'-0"
G HALF GLASS — 1/4" = 1'-0"
F FLUSH — 1/4" = 1'-0"

GENERAL PARTITION NOTES

1. ACOUSTICAL CONSTRUCTION: SEAL ALL CRACKS, JOINTS, AND VOIDS IN ACOUSTICAL CONSTRUCTION AIITIGHT. SEALING SHALL INCLUDE:
a. SEALING BOTTOM EDGES OF GYPSUM BOARD TO FLOOR BEHIND BASE AT BOTH SIDES OF PARTITIONS.
b. SEALING TOP AND SIDE EDGES OF GYPSUM BOARD AT BOTH SIDES OF WALLS ABUTTING OTHER CONSTRUCTION.
c. SEALING TOP OF WALL TO DECK FLUTES.
d. SEALING ALL WALL PENETRATIONS INCLUDING ELECTRICAL BOXES, PIPES, CONDUITS, DUCTS, BEAMS, JOISTSETC.

2. AT PARTITION INFILL LOCATIONS, INFILL TO MATCH ADJACENT MATERIALS AND FIRE RESISTANCE RATING.

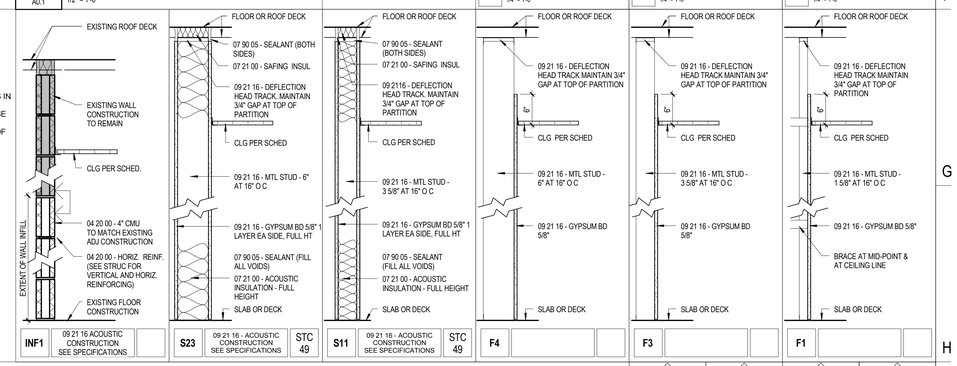

INF1	S23	S11	F4	F3	F1
09 21 16 ACOUSTIC CONSTRUCTION SEE SPECIFICATIONS	09 21 16 - ACOUSTIC CONSTRUCTION SEE SPECIFICATIONS — STC 49	09 21 16 - ACOUSTIC CONSTRUCTION SEE SPECIFICATIONS — STC 49			

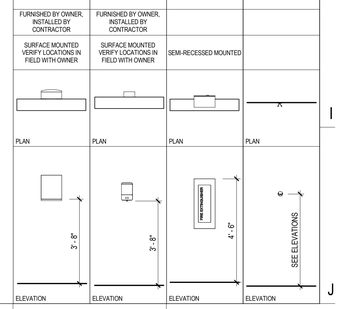

LAVALLEE | BRENSINGER ARCHITECTS
155 Dow Street, Suite 400, Manchester, NH 03101
40 Cambridge Street, Charlestown, MA 02129
NH: 603.622.5450 MA: 617.398.2035 www.LBPA.com

LICENSED ARCHITECT — CHRISTOPHER D. PRINCE — 3237 — STATE OF MAINE

UNIVERSITY OF SOUTHERN MAINE

PAYSON-SMITH HALL CHEMISTRY LAB RENOVATION

96 Falmouth Street, Portland, ME, 04101

NO.	DESCRIPTION	DATE

CONTENT:
LEGENDS, SYMBOLS, NOTES, PARTITION TYPES. DOOR AND FRAME TYPES & 1-1/2" DETAILS

DRAWN BY:	Author
PROJECT NO:	14-049-00
DATE:	01/09/2015
REVISED:	
SCALE:	As indicated

A0.1

Project Phase
BID DOCUMENTS

COPYRIGHT © 2014 BY LAVALLEE/BRENSINGER PROFESSIONAL ASSOCIATION. ALL RIGHTS RESERVED. NO REPRODUCTION WITHOUT PERMISSION.

1/9/2015 2:56:36 PM C:\Projects\14-049 USM Payson Lab_Central-Revit 2014_mike_mathan.rvt