BASE CABINET LEGEND			
CASEWORK TYPE	UNDER 3'-0" (36") COUNTERTOP HEIGHT '1'	UNDER 2'-10" (34") COUNTERTOP HEIGHT '2'	TYPE NOTES
BC			HINGED SINGLE DOOR
BCBC			BLIND CORNER CABINET
BCD			HINGED SINGLE DOOR WITH DRAWER
BCD4			(4) DRAWERS
BCFH			FUME HOOD BASE CABINET. HINGED SINGLE OR DOUBLE DOOR. SEE INTERIOR ELEVATIONS
BCFH			SOLVENT STORAGE BASE CABINETS
BCVP			VACUUM PUMP STORAGE BASE CABINETS
BCSB			SINK BASE CABINETS
BCLD			LAPTOP DRAWER BASE CABINETS TWO PULLOUT TRAYS

MILLWORK - CASEWORK - COUNTERTOP NOTES:

General Notes
1. Verify all conditions and dimensions in the field prior to fabrication.

2. Verify sizes and requirements of all Owner furnished equipment to be set into millwork and casework.

3. To the extent mechanical and electrical information indicated on architectural drawings, it is provided for convenience only and is not necessarily intended to represent all work required.

Cabinets
1. Finish exposed cabinet sides at ends, knee spaces, appliance recesses, etc to match face.

2. Return finish valance end panels to wall at exposed ends.

3. Recess base kickboard 3" at exposed ends where base cabinets are constructed with separate bases.

4. Provide complete base kickboards scribed to uneven floors.

5. Provide matching scribes to within 1/16" of adjacent surfaces.

6. Provide matching fillers (face and upper cabinet top & bottom) where required.

7. Provide and install locks per specification for all doors and drawers in Lab 305.

Countertops
1. All countertops to be 1" thick molded epoxy resin unless noted otherwise (U.N.O.)

2. Return side splash to align with edge of countertop nosing.

Symbols

2BCD4
- CABINET TYPE
- BASE CABINET
- CABINET HEIGHT

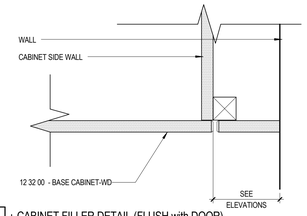

B9 A7.2 + CABINET FILLER DETAIL (FLUSH with DOOR)
3" = 1'-0"

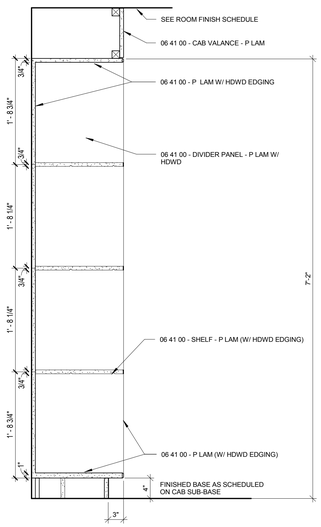

E9 A7.2 SHELVING
1" = 1'-0"

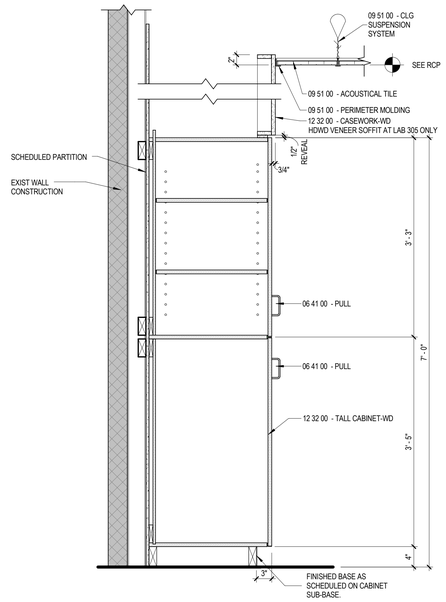

E12 A7.2 + TALL STORAGE CABINET LOW-HIGH DOORS (TC2D)
1" = 1'-0"

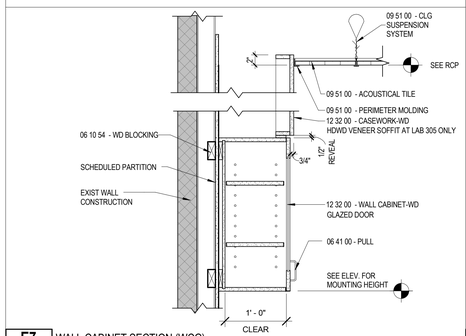

E7 A7.2 WALL CABINET SECTION (WCG)
1" = 1'-0"

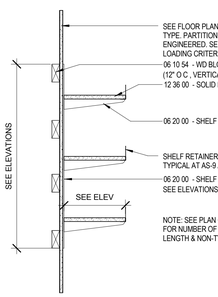

G1 A7.2 ADJUSTABLE SHELVING (AS)
1" = 1'-0"

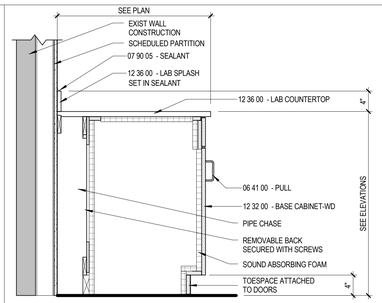

G3 A7.2 + BASE CABINET SECTION VACUUM PUMP (BCVP)
1" = 1'-0"

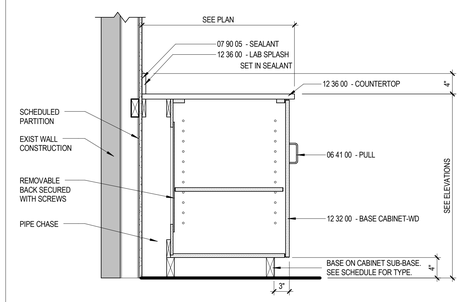

G6 A7.2 + BASE CABINET SECTION SECTION (BC)
1" = 1'-0"

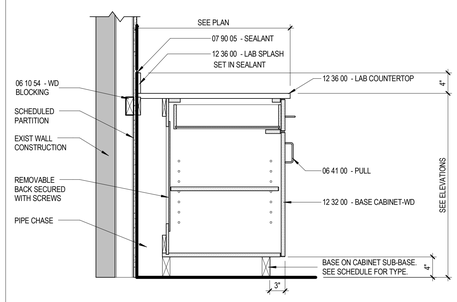

G9 A7.2 + BASE CABINET SECTION w DRAWER SECTION (BCD)
1" = 1'-0"

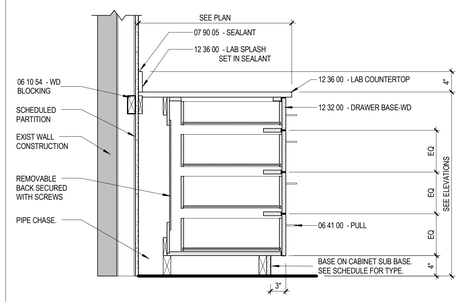

G12 A7.2 + BASE CABINET SECTION 4 DRAWER (BCD4)
1" = 1'-0"

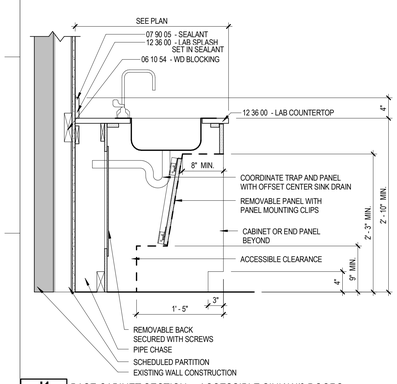

J1 A7.2 BASE CABINET SECTION w ACCESSIBLE SINK W/0 DOORS
1" = 1'-0"

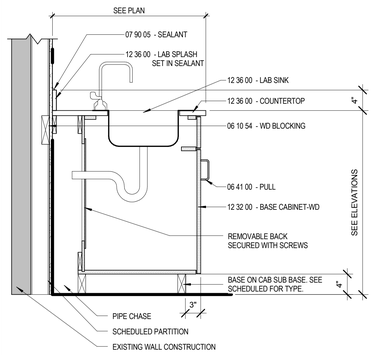

J3 A7.2 + BASE CABINET SECTION w SINK (BCSB)
1" = 1'-0"

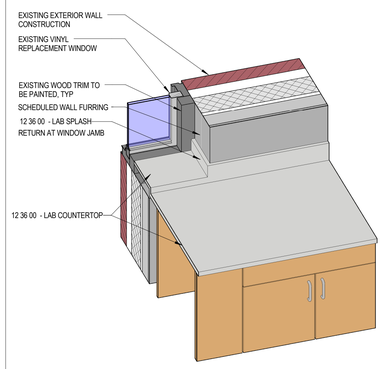

J6 A7.2 ISOMETRIC OF LAB 305 WINDOW SILL

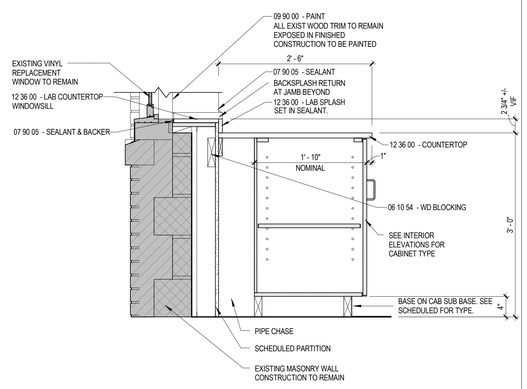

J8 A7.2 COUNTER SECTION AT WINDOW (LAB 305)
1" = 1'-0"

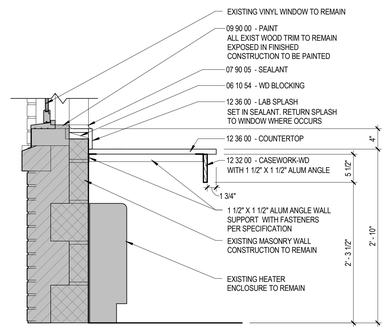

J12 A7.2 COUNTER SECTION AT WINDOW (PREP ROOM 305A)
1" = 1'-0"

LAVALLEE | BRENSINGER ARCHITECTS
155 Dow Street, Suite 400, Manchester, NH 03101
40 Cambridge Street, Charlestown, MA 02129
NH: 603.622.5450 MA: 617.398.2035 www.LBPA.com

UNIVERSITY OF SOUTHERN MAINE

PAYSON-SMITH HALL CHEMISTRY LAB RENOVATION

96 Falmouth Street, Portland, ME, 04101

NO.	DESCRIPTION	DATE

CONTENT:
MILLWORK DETAILS

DRAWN BY:	Author
PROJECT NO:	14-049-00
DATE:	01/09/2015
REVISED:	
SCALE:	As indicated

A7.2

Project Phase
BID DOCUMENTS

COPYRIGHT © 2014 BY LAVALLEE/BRENSINGER PROFESSIONAL ASSOCIATION. ALL RIGHTS RESERVED. NO REPRODUCTION WITHOUT PERMISSION.

1/9/2015 2:57:55 PM C:\Projects\14-049 USM Payson Lab_Central-Revit 2014_mike_mahan.rvt