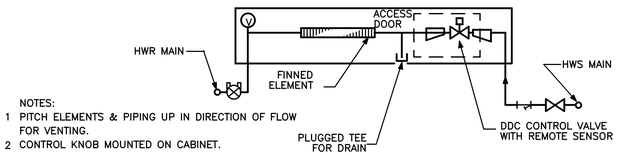

NOTES:
1 PITCH ELEMENTS & PIPING UP IN DIRECTION OF FLOW FOR VENTING.
2 CONTROL KNOB MOUNTED ON CABINET.

HW BASEBOARD DETAIL — M12

NO SCALE | REF: NA

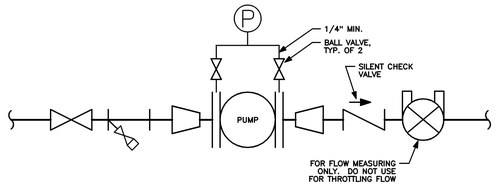

INLINE PUMP DETAIL — M11

NO SCALE | REF: NA

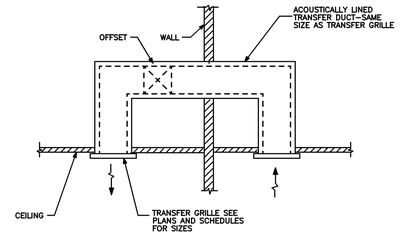

TRANSFER DUCT DETAIL — M10

NO SCALE | REF: NA

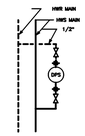

DIFFERENTIAL PRESSURE SENSOR DETAIL — M9

NO SCALE | REF: NA

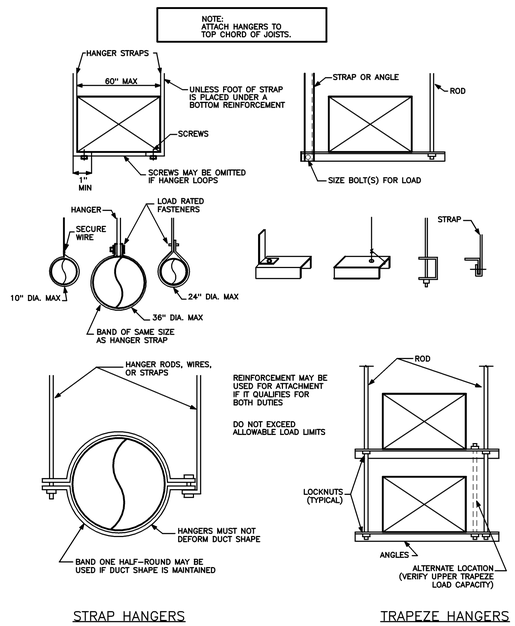

DUCT ATTACHMENT DETAILS — M8

NO SCALE | REF: NA

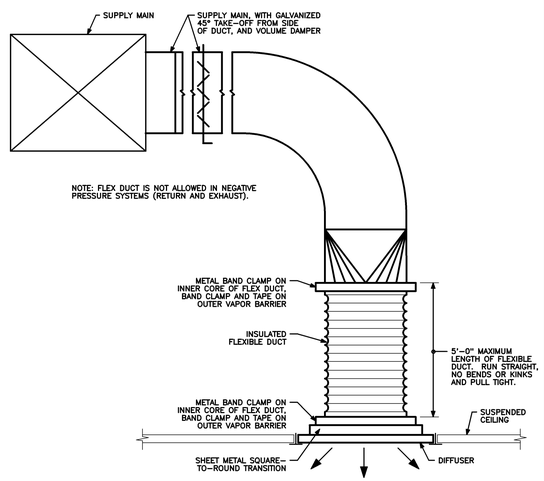

FLEXIBLE DUCT DETAIL — M7

NO SCALE | REF: NA

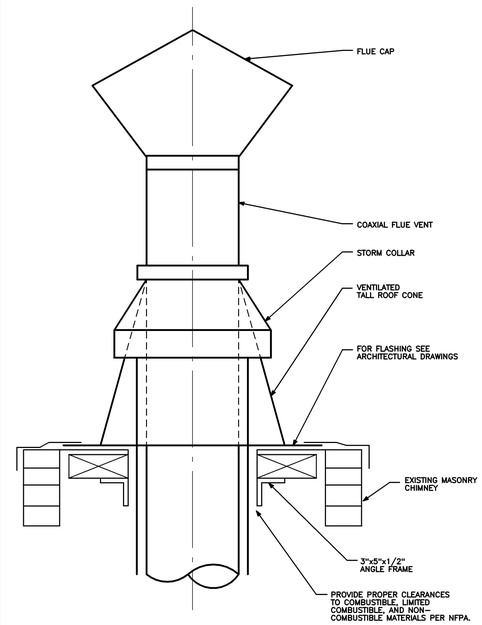

BOILER VENT OUTLET DETAIL — M6

NO SCALE | REF: NA

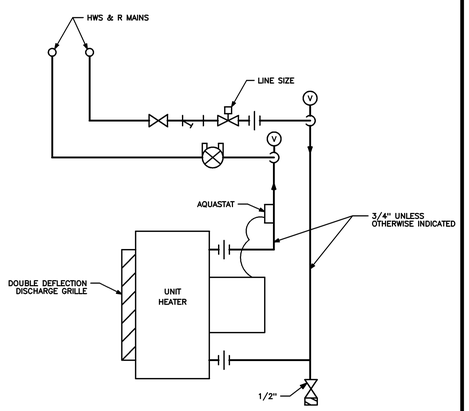

UNIT HEATER PIPING DETAIL — M5

NO SCALE | REF: NA

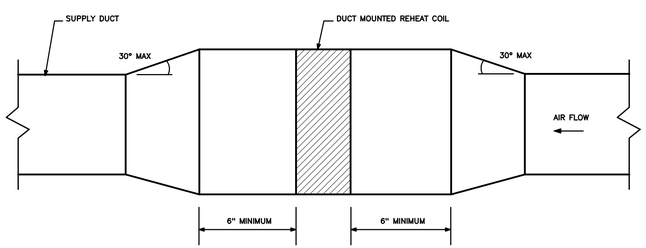

REHEAT COIL DUCT CONNECTION DETAIL — M4

NO SCALE | REF: NA

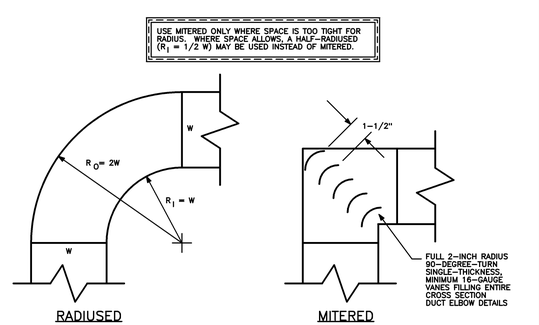

DUCT ELBOW DETAILS — M3

NO SCALE | REF: NA

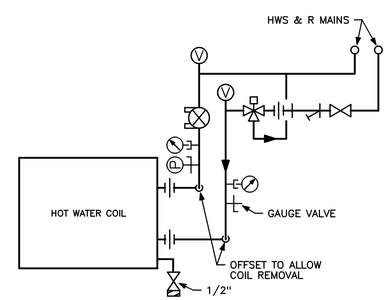

REHEAT COIL PIPING DETAIL — M2

NO SCALE | REF: NA

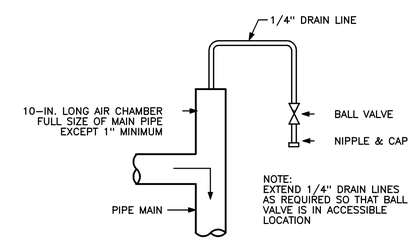

PIPING HIGH POINT VENT

MANUAL AIR VENT DETAIL — M1

NO SCALE | REF: NA

HARRIMAN
Architects + Engineers
46 Harriman Drive
Auburn, ME 04210
207.784.5100 tel
123 Middle Street
Portland, ME 04101
207.775.0053 tel
One Perimeter Road
Manchester, NH 03103
603.626.1242 tel
www.harriman.com

© 2012

STATE OF MAINE — CLIFTON W. GREIM — No. 5405 — LICENSED PROFESSIONAL ENGINEER

Project Title
USM 25 BEDFORD STREET RENOVATION
PORTLAND, ME

HA Project No. 11711

Key Plan

Mark	Date	Description
–	04–02–12	ISSUED FOR BID

Issue Dates

Drawing Status

Drawing Title
MECHANICAL DETAILS

PA / PE: CG | Drawn By: JSL

Drawing Number
M30.1