City of Portland, Maine - Building or Use Permit Application

389 Congress Street, 04101 Tel: (207) 874-8703, Fax: (207) 874-8716

Permit No:	Issue Date:	CBL:
04-1172	SEP 07 2004 CITY OF PORTLAND	114 A004001

Location of Construction:	Owner Name:	Owner Address:	Phone:
15 Surrenden St	University Of Maine	107 Maine Ave	
Business Name:	**Contractor Name:**	**Contractor Address:**	**Phone**
	Maine Air Conditioning	93 Warren Ave. Portland	2077977417
Lessee/Buyer's Name	**Phone:**	**Permit Type:**	**Zone:**
		HVAC	R-5

Past Use:	Proposed Use:	Permit Fee:	Cost of Work:	CEO District:
USM	USM / Add 4 Geothermal Heat Pumps	$4,971.00	$550,000.00	2

FIRE DEPT: ☑ Approved ☐ Denied
Signature:

INSPECTION: Use Group: HVAC Type: 9/3/04
Signature:

Proposed Project Description:
Add 4 Geothermal Heat Pumps

PEDESTRIAN ACTIVITIES DISTRICT (P.A.D.)
Action: ☐ Approved ☐ Approved w/Conditions ☐ Denied
Signature: Date:

Permit Taken By:	Date Applied For:
ldobson	08/16/2004

1. This permit application does not preclude the Applicant(s) from meeting applicable State and Federal Rules.
2. Building permits do not include plumbing, septic or electrical work.
3. Building permits are void if work is not started within six (6) months of the date of issuance. False information may invalidate a building permit and stop all work..

Zoning Approval

Special Zone or Reviews	Zoning Appeal	Historic Preservation
☐ Shoreland	☐ Variance	☑ Not in District or Landmark
☐ Wetland	☐ Miscellaneous	☐ Does Not Require Review
☐ Flood Zone	☐ Conditional Use	☐ Requires Review
☐ Subdivision	☐ Interpretation	☐ Approved
☐ Site Plan	☐ Approved	☐ Approved w/Conditions
Maj ☐ Minor ☐ MM ☐	☐ Denied	☐ Denied
Date: OK 8/16/04	Date:	Date:

CERTIFICATION

I hereby certify that I am the owner of record of the named property, or that the proposed work is authorized by the owner of record and that I have been authorized by the owner to make this application as his authorized agent and I agree to conform to all applicable laws of this jurisdiction. In addition, if a permit for work described in the application is issued, I certify that the code official's authorized representative shall have the authority to enter all areas covered by such permit at any reasonable hour to enforce the provision of the code(s) applicable to such permit.

SIGNATURE OF APPLICANT ADDRESS DATE PHONE

RESPONSIBLE PERSON IN CHARGE OF WORK, TITLE DATE PHONE

City of Portland, Maine - Building or Use Permit

389 Congress Street, 04101 Tel: (207) 874-8703, Fax: (207) 874-8716

Permit No:	Date Applied For:	CBL:
04-1172	08/16/2004	114 A004001

Location of Construction:	Owner Name:	Owner Address:	Phone:
15 Surrenden St	University Of Maine	107 Maine Ave	
Business Name:	**Contractor Name:**	**Contractor Address:**	**Phone**
	Maine Air Conditioning	93 Warren Ave. Portland	(207) 797-7417
Lessee/Buyer's Name	**Phone:**	**Permit Type:**	
		HVAC	

Proposed Use:	Proposed Project Description:
USM / Add 4 Geothermal Heat Pumps	Add 4 Geothermal Heat Pumps

Dept: Zoning **Status:** Approved **Reviewer:** Marge Schmuckal **Approval Date:** 08/16/2004
Note: **Ok to Issue:** ☑

Dept: Building **Status:** Approved **Reviewer:** Mike Nugent **Approval Date:** 09/03/2004
Note: **Ok to Issue:** ☑

Dept: Fire **Status:** Approved **Reviewer:** Lt. MacDougal **Approval Date:** 08/30/2004
Note: **Ok to Issue:** ☑

Commercial Building Permit Application

Location/Address of Construction: 15 SURRENDEN ST. / BEDFORD ST.		
Total Square Footage of Proposed Structure: 32,285 sf	Square Footage of Lot: 89,555 sf	
Tax Assessor's Chart, Block & Lot Chart# 114 Block# A Lot# 004	Owner: UNIVERSITY OF MAINE SYSTEM c/o UNIVERSITY OF SOUTHERN MAINE	Telephone: 207 780 4160
Lessee/Buyer's Name (If Applicable)	Applicant name, address & telephone: CAROL POTTER P.O. BOX 9300 PORTLAND, ME 04104 207 228 8124	Cost Of Work: $ SEE BELOW Fee: $ SEE BELOW

Current Specific use: _____

Proposed Specific use: 500+ SEAT LECTURE HALL, OFFICES & CLASSROOMS

Project description:

THESE DRAWINGS DEPICT THE HVAC WORK THAT WILL BE PERFORMED UNDER PERMIT #04-0130 ISSUED 5-24-04, AND ARE SUBMITTED AS AN AMENDMENT TO THAT PERMIT.

Contractor's name, address & telephone: CONSIGLI NORTHERN 84 MIDDLE ST. PORTLAND, ME 04101 207 774 3500

Who should we contact when the permit is ready: CAROL POTTER

Mailing address: USM
P.O. BOX 9300
PORTLAND, ME 04104

Phone: 207 228 8124

At the discretion of the Planning and Development Department, additional information may be required prior to permit approval. For further information stop by the Building Inspections office, room 315 City Hall or call 874-8703.

I hereby certify that I am the Owner of record of the named property, or that the owner of record authorizes the proposed work and that I have been authorized by the owner to make this application as his/her authorized agent. I agree to conform to all applicable laws of this jurisdiction. In addition, if a permit for work described in this application is issued, I certify that the Code Official's authorized representative shall have the authority to enter all areas covered by this permit at any reasonable hour to enforce the provisions of the codes applicable to this permit.

Signature of applicant:	**Date:**

This is not a Permit; you may not commence any work until the Permit is issued.

FILL IN AND SIGN WITH INK

APPLICATION FOR PERMIT
HEATING OR POWER EQUIPMENT

To the INSPECTOR OF BUILDINGS, PORTLAND, ME.

The undersigned hereby applies for a permit to install the following heating, cooking or power equipment in accordance with the Laws of Maine, the Building Code of the City of Portland, and the following specifications:

Location / CBL 114 A 4 Use of Building University Date 8/13/04

Name and address of owner of appliance University of Southern Maine Bedford ST

Installer's name and address Maine Air Conditioning, 93 Warren ave Portland ME Telephone 797-7468 - ext 224

Location of appliance:

- ☒ Basement
- ☐ Floor
- ☐ Attic
- ☐ Roof

Type of Fuel:

- ☐ Gas
- ☐ Oil
- ☐ Solid Electric

Appliance Name: Geothermal Heat Pump

U.L. Approved ☐ Yes ☒ No QTY 4

2 ETL Safety Listing

Will appliance be installed in accordance with the manufacture's installation instructions? ☒ Yes ☐ No

IF NO Explain:

The Type of License of Installer:

- ☐ Master Plumber #
- ☐ Solid Fuel #
- ☐ Oil #
- ☐ Gas #
- ☒ Other Ref. Handling 05420552 /

Type of Chimney: NA

- ☐ Masonry Lined
  Factory built
- ☐ Metal
  Factory Built U.L. Listing #
- ☐ Direct Vent
  Type UL#

Type of Fuel Tank

- ☐ Oil
- ☐ Gas

None

Size of Tank NA

Number of Tanks NA

Distance from Tank to Center of Flame _____ **feet.**

Cost of Work: $ 550,000

Permit Fee: $ 4,971

Approved

Fire:

Ele.:

Bldg.:

Approved with Conditions

☐ See attached letter or requirement

Inspector's Signature

Date Approved

Signature of Installer Paul C Ulmy Sales Engineer Maine Air Conditioning

White - Inspection Yellow - File Pink - Applicant's Gold - Assessor's Copy

CLIMATEMASTER®

SERIES:	GLW - R22
HZ:	60
UNIT OF MEAS:	IP
LANGUAGE:	ENGLISH

Contractor: MAINE AIR CONDITIONING P.O.: _____

Engineer: MAINE AIR CONDITIONING

Project Name: USM Unit Tag: _____

Genesis (GLW) Series Large Water to Water Submittal Data

Model GLW 360

60Hz - R22

English Language/IP Units

REVISION: 11/18/02

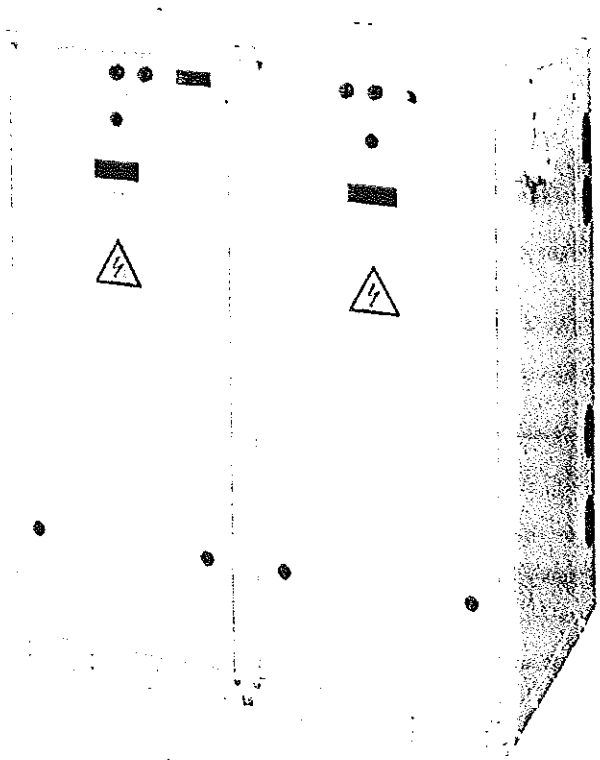

WATER ENERGY SYSTEMS
100 MAPLE AVE
ATKINSON NH
603 362 4666

ClimateMaster works continually to improve its products. As a result, the design and specifications of each product at the time of order may be changed without notice and may not be as described herein. Please contact ClimateMaster's Customer Service Department at 1-405-745-6000 for specific information on the current design and specifications. Statements and other information contained herein are not express warranties and do not form the basis of any bargain between the parties, but are merely ClimateMaster's opinion or commendation of its products. The latest version of this document is available at www.climatemaster.com.

GLW Submittal Data

CLIMATEMASTER®

PERFORMANCE DATA
GLW360 COOLING

Contractor: MAINE AIR CONDITIONING *P.O.:* _____

Engineer: MAINE AIR CONDITIONING

Project Name: USM *Unit Tag:* _____

SOURCE				LOAD																								
EWT	Flow			EWT	Flow 45.0 gpm							Flow 67.5 gpm							Flow 90 gpm									
	GPM	WPD			TC	Power	HR	LWT	EER	WPD		TC	Power	HR	LWT	EER	WPD		TC	Power	HR	LWT	EER	WPD				
°F		PSI	FT	°F	MBtuh	KW	MBtuh	°F		PSI	FT	MBtuh	KW	MBtuh	°F		PSI	FT	MBtuh	KW	MBtuh	°F		PSI	FT			
50	45.0	2.4	5.5	50	279	15.0	330	37.7	18.6	2.2	5.1	292	15.2	344	41.4	19.2	4.8	11.1	298	15.3	350	43.4	19.5	8.2	18.9			
				60	323	15.7	377	45.7	20.6			340	15.9	394	50.0	21.3			348	16.0	402	52.3	21.7					
				70	371	16.4	427	53.6	22.6			391	16.7	448	58.5	23.4			401	16.9	459	61.1	23.8					
				80	421	17.2	479	61.3	24.5			445	17.6	505	66.8	25.4			458	17.8	518	69.8	25.8					
				90	473	18.0	534	69.0	26.3			503	18.5	566	75.1	27.2			518	18.7	582	78.5	27.6					
	67.5	5.1	11.8	50	292	14.4	331	37.5	19.6			295	14.6	345	41.3	20.2			302	14.7	352	43.3	20.5					
				60	328	15.0	379	45.5	21.8			344	15.3	397	49.8	22.6			353	15.4	406	52.2	22.9					
				70	376	15.7	430	53.3	23.9			397	16.0	452	58.3	24.8			408	16.2	463	61.0	25.2					
				80	428	16.5	484	61.0	26.0			454	16.8	511	66.6	27.0			467	17.0	526	69.6	27.4					
				90	482	17.3	541	68.6	27.9			514	17.7	574	74.8	29.0			530	18.0	592	78.2	29.5					
	90.0	8.7	20.1	50	284	14.1	332	37.5	20.0			297	14.3	346	41.3	20.7			304	14.4	353	43.3	21.1					
				60	330	14.7	380	45.4	22.4			347	15.0	398	49.8	23.2			356	15.1	407	52.1	23.6					
				70	379	15.4	432	53.2	24.6			401	15.7	454	58.2	25.5			412	15.9	466	60.9	26.0					
				80	431	16.1	487	60.9	26.7			458	16.5	515	66.4	27.7			472	16.7	529	69.5	28.2					
				90	487	17.0	544	68.4	28.7			519	17.4	579	74.6	29.8			536	17.7	597	73.1	30.3					
70	45.0	2.4	5.5	50	264	18.4	326	38.4	14.4	2.2	5.1	275	18.5	338	41.9	14.8	4.8	11.1	280	18.6	344	43.8	15.1	8.2	18.9			
				60	305	18.9	370	46.5	16.1			319	19.1	384	50.6	16.7			326	19.2	392	52.8	16.9					
				70	349	19.6	416	54.5	17.8			367	19.8	434	59.2	18.5			375	20.0	444	61.7	18.8					
				80	396	20.3	465	62.4	19.5			417	20.6	488	67.7	20.2			428	20.8	499	70.5	20.6					
				90	445	21.1	517	70.2	21.1			471	21.5	544	76.1	21.9			484	21.7	558	79.2	22.3					
	67.5	5.1	11.8	50	267	17.6	327	38.2	15.2			279	17.7	339	41.8	15.8			285	17.8	345	43.7	16.0					
				60	310	18.0	371	46.3	17.2			324	18.2	387	50.4	17.8			332	18.3	394	52.7	18.1					
				70	355	18.6	419	54.3	19.1			374	18.8	438	59.0	19.9			383	18.9	448	61.5	20.2					
				80	404	19.2	469	62.1	21.0			426	19.5	493	67.4	21.9			438	19.7	505	70.3	22.3					
				90	455	19.9	523	69.8	22.9			482	20.3	552	75.7	23.8			497	20.5	566	79.0	24.3					
	90.0	8.7	20.1	50	269	17.2	328	38.1	15.7			281	17.3	340	41.7	16.2			287	17.3	346	43.7	16.5					
				60	312	17.6	372	46.2	17.7			327	17.8	388	50.3	18.4			335	17.9	396	52.6	18.7					
				70	358	18.1	420	54.1	19.8			377	18.3	440	58.9	20.6			387	18.5	450	61.4	21.0					
				80	408	18.7	471	61.9	21.8			431	19.0	496	67.3	22.7			443	19.1	508	70.2	23.1					
				90	459	19.3	526	69.6	23.7			488	19.7	555	75.5	24.7			503	19.9	571	78.8	25.2					
90	45.0	2.4	5.5	50	244	22.8	322	39.2	10.7	2.2	5.1	254	23.0	332	42.5	11.0	4.8	11.1	258	23.1	337	44.3	11.2	8.2	18.9			
				60	283	23.5	363	47.5	12.1			295	23.6	376	51.3	12.5			301	23.7	382	53.3	12.7					
				70	324	24.1	407	55.6	13.5			339	24.3	422	60.0	13.9			347	24.5	430	62.3	14.2					
				80	368	24.8	453	63.7	14.8			386	25.1	472	68.6	15.4			395	25.3	482	71.2	15.6					
				90	414	25.6	502	71.6	16.2			436	26.0	525	77.1	16.8			448	26.2	537	80.1	17.1					
	67.5	5.1	11.8	50	249	21.8	323	39.0	11.4			259	21.9	333	42.4	11.8			263	22.0	338	44.2	12.0					
				60	289	22.3	365	47.2	13.0			301	22.4	378	51.1	13.4			307	22.5	384	53.2	13.7					
				70	331	22.8	409	55.3	14.5			347	23.0	425	59.7	15.1			355	23.1	434	62.1	15.4					
				80	377	23.4	456	63.3	16.1			396	23.6	477	68.3	16.8			406	23.7	487	71.0	17.1					
				90	425	24.0	506	71.1	17.7			448	24.3	531	76.7	18.4			460	24.5	544	79.8	18.8					
	90.0	8.7	20.1	50	251	21.3	324	38.9	11.8			261	21.4	334	42.3	12.2			266	21.5	339	44.1	12.4					
				60	291	21.7	365	47.1	13.4			304	21.9	379	51.0	13.9			311	21.9	385	53.1	14.2					
				70	335	22.2	410	55.2	15.1			351	22.3	427	59.6	15.7			359	22.4	435	62.0	16.0					
				80	381	22.7	458	63.1	16.8			401	22.9	479	68.1	17.5			411	23.0	490	70.9	17.9					
				90	430	23.2	509	70.9	18.5			454	23.5	534	76.6	19.3			467	23.7	548	79.6	19.7					
110	45.0	2.4	5.5	50	220	28.5	317	40.3	7.7	2.2	5.1	228	28.7	325	43.3	7.9	4.8	11.1	231	28.8	330	44.9	8.0	8.2	18.9			
				60	256	29.3	356	48.7	9.8			266	29.5	367	52.1	9.0			271	29.6	372	54.0	9.2					
				70	295	30.1	398	56.9	9.8			307	30.3	411	60.9	10.1			314	30.5	418	63.0	10.3					
				80	336	30.9	442	65.1	10.9			351	31.2	458	69.6	11.3			359	31.4	466	72.0	11.4					
				90	379	31.8	488	73.1	11.9			398	32.1	508	78.2	12.4			407	32.3	518	81.0	12.6					
	67.5	5.1	11.8	50	225	27.3	318	40.1	8.3			233	27.4	327	43.1	8.5			238	27.5	331	44.8	8.7					
				60	263	27.9	358	48.4	9.4			273	28.0	369	51.9	9.8			279	28.1	374	53.8	9.9					
				70	303	28.4	400	56.6	10.7			316	28.6	414	60.7	11.0			323	28.7	421	62.8	11.2					
				80	346	29.1	445	64.7	11.9			362	29.3	462	69.3	12.4			370	29.4	470	71.8	12.6					
				90	391	29.7	492	72.7	13.1			411	30.0	513	77.8	13.7			421	30.2	524	80.7	14.0					
	90.0	8.7	20.1	50	228	26.7	319	39.9	8.6			236	26.8	328	43.0	8.8			241	26.8	332	44.7	9.0					
				60	266	27.2	359	48.2	9.8			277	27.3	370	51.8	10.1			282	27.4	376	53.8	10.3					
				70	307	27.7	401	56.4	11.1			320	27.8	415	60.5	11.5			327	27.9	422	62.7	11.7					
				80	350	28.2	446	64.5	12.4			367	28.4	464	69.1	12.9			376	28.5	473	71.7	13.2					
				90	396	28.7	494	72.4	13.8			417	29.0	516	77.7	14.4			427	29.1	527	80.5	14.7					

Interpolation is permissible, extrapolation is not.
All performance data is based upon the lower voltage of dual voltage rated units.

Rev 7/31/02 8

ClimateMaster works continually to improve its products. As a result, the design and specifications of each product at the time of order may be changed without notice and may not be as described herein. Please contact ClimateMaster's Customer Service Department at 1-405-745-6000 for specific information on the current design and specifications. Statements and other information contained herein are not express warranties and do not form the basis of any bargain between the parties, but are merely ClimateMaster's opinion or commendation of its products. The latest version of this document is available at www.climatemaster.com.

GLW Submittal Data

CLIMATEMASTER®

PERFORMANCE DATA
GLW360 HEATING

Contractor: MAINE AIR CONDITIONING *P.O.:* _____

Engineer: MAINE AIR CONDITIONING

Project Name: USM *Unit Tag:* _____

SOURCE				LOAD																								
EWT	Flow			EWT	Flow 45 gpm							Flow 67.5 gpm							Flow 90 gpm									
	GPM	WPD			HC	Power	HE	LWT	COP	WPD		HC	Power	HE	LWT	COP	WPD		HC	Power	HE	LWT	COP	WPD	
°F		PSI	FT	°F	MBtuh	KW	MBtuh	°F		PSI	FT	MBtuh	KW	MBtuh	°F		PSI	FT	MBtuh	KW	MBtuh	°F		PSI	FT
				60	219	15.1	167	69.7	4.24			219	14.6	169	66.5	4.38			218	14.4	169	64.3	4.45		
20	90.0	2.6	6.0	80	220	18.9	155	89.8	3.41	2.2	5.1	220	18.3	157	86.5	3.53	4.8	11.1	220	18.0	159	84.9	3.58	8.2	18.9
				100	217	23.4	137	109.6	2.71			217	22.7	140	106.4	2.81			218	22.4	141	104.8	2.85		
				120	210	28.8	111	129.3	2.13			211	28.0	115	126.3	2.21			211	27.6	117	124.7	2.24		
				60	246	15.5	193	70.9	4.65			245	14.9	194	67.2	4.82			245	14.6	195	65.4	4.91		
	45.0	2.6	6.0	80	246	19.3	180	90.9	3.74			246	18.6	183	87.3	3.88			246	18.3	184	85.5	3.95		
				100	244	24.0	162	110.9	2.98			245	23.2	166	107.3	3.09			245	22.8	167	105.5	3.15		
				120	239	29.8	138	130.7	2.35			240	28.8	142	127.1	2.44			241	28.4	144	125.4	2.49		
				60	253	15.6	200	71.2	4.76			253	15.0	202	67.5	4.94			253	14.7	203	65.6	5.03		
30	67.5	5.6	12.9	80	253	19.4	187	91.2	3.82	2.2	5.1	253	18.7	189	87.5	3.96	4.8	11.1	253	18.4	190	85.6	4.04	8.2	18.9
				100	250	24.2	168	111.1	3.03			251	23.3	171	107.4	3.15			251	22.9	173	105.6	3.21		
				120	244	29.9	142	130.9	2.39			245	28.9	146	127.3	2.48			246	28.5	149	125.5	2.53		
				60	257	15.6	203	71.4	4.82			257	15.0	205	67.6	5.00			257	14.8	206	65.7	5.10		
	90.0	9.5	21.9	80	256	19.5	190	91.4	3.86			256	18.7	192	87.6	4.01			256	18.4	194	85.7	4.09		
				100	253	24.2	170	111.3	3.06			254	23.4	174	107.5	3.18			254	23.0	176	105.6	3.24		
				120	246	30.0	144	131.0	2.41			248	29.0	149	127.4	2.50			248	28.5	151	125.5	2.55		
				60	287	16.0	232	72.7	5.25			287	15.4	234	68.5	5.47			287	15.1	236	66.4	5.58		
	45.0	2.4	5.5	80	285	19.9	217	92.7	4.20			286	19.1	220	88.5	4.38			286	18.7	222	86.3	4.48		
				100	282	24.8	197	112.6	3.33			283	23.8	201	108.4	3.48			283	23.4	203	106.3	3.55		
				120	277	30.9	172	132.3	2.63			278	29.7	177	128.3	2.74			279	29.2	179	126.2	2.80		
				60	296	16.1	241	73.1	5.38			297	15.5	244	68.8	5.61			297	15.2	245	66.6	5.73		
40	67.5	5.1	11.8	80	293	20.0	225	93.0	4.30	2.2	5.1	294	19.2	229	88.7	4.49	4.8	11.1	294	18.8	230	86.5	4.59	8.2	18.9
				100	289	25.0	204	112.9	3.40			290	23.9	208	108.6	3.55			291	23.4	211	106.5	3.63		
				120	283	31.0	177	132.6	2.67			284	29.9	182	128.4	2.79			285	29.3	185	126.3	2.85		
				60	301	16.2	246	73.3	5.44			302	15.5	248	68.9	5.68			302	15.2	250	66.7	5.81		
	90.0	8.7	20.1	80	297	20.1	229	93.2	4.34			298	19.2	233	88.8	4.55			299	18.8	234	86.6	4.65		
				100	293	25.0	207	113.0	3.43			294	24.0	212	108.7	3.59			294	23.5	214	106.5	3.67		
				120	286	31.1	180	132.7	2.69			287	29.9	185	128.5	2.81			288	29.3	188	126.4	2.88		
				60	328	16.6	272	74.6	5.81			329	15.9	275	69.7	6.09			330	15.5	277	67.3	6.23		
	45.0	2.4	5.5	80	324	20.5	255	94.4	4.65			325	19.5	259	89.6	4.88			326	19.1	261	87.2	5.00		
				100	320	25.5	233	114.2	3.67			321	24.4	238	109.5	3.86			321	23.8	240	107.1	3.95		
				120	314	31.9	205	134.0	2.69			315	30.5	211	129.4	3.03			316	29.8	214	127.0	3.11		
				60	341	16.7	284	75.1	5.97			342	16.0	287	70.1	6.26			343	15.7	289	67.6	6.41		
50	67.5	5.1	11.8	80	335	20.6	265	94.9	4.77	2.2	5.1	336	19.7	269	90.0	5.02	4.8	11.1	337	19.2	271	87.5	5.14	8.2	18.9
				100	329	25.7	241	114.6	3.75			330	24.5	247	109.8	3.95			331	23.9	249	107.4	4.05		
				120	322	32.0	212	134.3	2.94			323	30.6	219	129.6	3.09			324	29.9	222	127.2	3.17		
				60	347	16.8	290	75.4	6.05			348	16.1	294	70.3	6.35			349	15.7	296	67.7	6.50		
	90.0	8.7	20.1	80	340	20.7	270	95.1	4.82			342	19.7	275	90.1	5.08			343	19.3	277	87.6	5.21		
				100	333	25.8	246	114.8	3.79			335	24.6	251	109.9	4.00			336	24.0	254	107.5	4.10		
				120	325	32.1	216	134.5	2.97			327	30.7	222	129.7	3.12			328	30.0	226	127.3	3.20		
				60	373	17.2	315	76.6	6.37			375	16.4	319	71.1	6.70			376	16.0	321	68.3	6.87		
	45.0	2.4	5.5	80	366	21.0	295	96.3	5.10			368	20.0	300	90.9	5.39			369	19.5	302	88.2	5.54		
				100	360	26.2	270	116.0	4.02			361	24.9	276	110.7	4.25			362	24.3	279	108.1	4.37		
				120	353	32.8	241	135.7	3.16			354	31.2	248	130.5	3.33			355	30.4	251	127.9	3.42		
				60	389	17.4	330	77.2	6.56			391	16.6	335	71.6	6.91			393	16.2	337	68.7	7.09		
60	67.5	5.1	11.8	80	380	21.2	307	96.9	5.24	2.2	5.1	382	20.2	313	91.3	5.56	4.8	11.1	383	19.7	316	88.5	5.71	8.2	18.9
				100	371	26.4	281	116.5	4.12			373	25.0	288	111.1	4.37			374	24.4	291	108.3	4.50		
				120	362	33.0	250	136.1	3.22			364	31.3	258	130.8	3.41			365	30.6	261	128.1	3.50		
				60	397	17.5	337	77.6	6.65			400	16.7	343	71.8	7.02			401	16.3	346	68.9	7.20		
	90.0	8.7	20.1	90	387	21.3	314	97.2	5.31			389	20.2	320	91.5	5.64			390	19.7	323	88.7	5.80		
				100	377	26.5	287	116.8	4.17			379	25.1	294	111.3	4.43			381	24.5	297	108.5	4.56		
				120	367	33.1	254	136.4	3.25			370	31.4	262	131.0	3.45			371	30.6	266	128.3	3.55		
				60	421	17.8	360	78.7	6.92			424	17.0	366	72.5	7.31			426	16.6	369	69.4	7.51		
	45.0	2.4	5.5	80	411	21.7	337	98.3	5.56			414	20.5	344	92.3	5.91			415	20.0	347	89.2	6.09		
				100	402	26.9	310	117.9	4.38			404	25.4	318	112.0	4.66			406	24.7	321	109.0	4.81		
				120	393	33.7	279	137.5	3.43			396	31.8	287	131.7	3.64			397	31.0	291	128.8	3.75		
				60	441	18.1	379	79.5	7.13			445	17.3	386	73.1	7.55			447	16.9	389	69.9	7.77		
70	67.5	5.1	11.8	90	428	21.9	353	99.0	5.72	2.2	5.1	431	20.7	361	92.8	6.10	4.8	11.1	433	20.2	364	89.6	6.30	8.2	18.9
				100	416	27.1	324	118.5	4.50			419	25.6	332	112.4	4.80			421	24.9	336	109.4	4.96		
				120	405	33.9	290	138.1	3.50			408	32.0	299	132.1	3.73			410	31.2	303	129.1	3.85		
				60	451	18.3	389	80.0	7.24			455	17.4	396	73.5	7.67			458	17.0	400	70.1	7.89		
	90.0	8.7	20.1	80	437	22.0	361	99.4	5.81			440	20.8	369	93.0	6.20			442	20.3	373	89.8	6.40		
				100	424	27.3	331	118.9	4.55			427	25.7	339	112.7	4.87			429	25.0	344	109.5	5.03		
				120	411	34.0	295	138.3	3.54			415	32.1	305	132.3	3.78			416	31.2	310	129.3	3.90		

Interpolation is permissible, extrapolation is not.
All performance data is based upon the lower voltage of dual voltage rated units.

Rev. 70162 B

ClimateMaster works continually to improve its products. As a result, the design and specifications of each product at the time of order may be changed without notice and may not be as described herein. Please contact ClimateMaster's Customer Service Department at 1-405-745-6000 for specific information on the current design and specifications. Statements and other information contained herein are not express warranties and do not form the basis of any bargain between the parties, but are merely ClimateMaster's opinion or commendation of its products. The latest version of this document is available at www.climatemaster.com

GLW Submittal Data

CLIMATEMASTER®

Contractor: MAINE AIR CONDITIONING P.O.: _____
Engineer: MAINE AIR CONDITIONING
Project Name: USM Unit Tag: _____

GLW PHYSICAL DATA

Model	360
Compressor/qty	Scroll/2
Factory Charge R22: each circuit - (lbs.) [kg]	9 [4.1]
Indoor/Load Water Connection Size	
FPT - All Other	2"
Outdoor/Source Water Connection Size	
FPT - All Other	2"
Weight - Operating - lbs. [kg]	955 [434]
Weight - Packaged - lbs. [kg]	1005 [457]

Grommet mounted compressor. Rev.: 08/26/02 B
Dedicated heating and cooling expansion valves with filter drier.
Insulated Indoor and Outdoor brazed plate heat exchangers.
Check serial plate for refrigerant type.
Insulated refrigerant and water piping.

GLW UNIT ELECTRICAL DATA

Model	Rated Voltage	Voltage Min/Max	Compressor			Total Unit FLA	Min Circ Amp	Max Fuse/ HACR
			RLA	LRA	Qty			
GLW360	208-230/60/3	187/254	41.0	350.0	2.0	82.0	92.3	125
	460/60/3	414/506	21.8	158.0	2.0	43.6	49.0	70
	575/60/3	518/633	17.3	125.0	2.0	34.6	38.9	50
	380-420/50/3	342/462	21.8	167.0	2.0	43.6	49.0	70

HACR circuit breaker in USA only

Rev.: 07/23/02 B

ClimateMaster works continually to improve its products. As a result, the design and specifications of each product at the time of order may be changed without notice and may not be as described herein. Please contact ClimateMaster's Customer Service Department at 1-405-745-6000 for specific information on the current design and specifications. Statements and other information contained herein are not express warranties and do not form the basis of any bargain between the parties, but are merely ClimateMaster's opinion or commendation of its products. The latest version of this document is available at www.climatemaster.com.

GLW Submittal Data

CLIMATEMASTER®

GLW360

DIMENSIONAL DATA

Contractor: MAINE AIR CONDITIONING P.O.: _____

Engineer: MAINE AIR CONDITIONING

Project Name: USM Unit Tag: _____

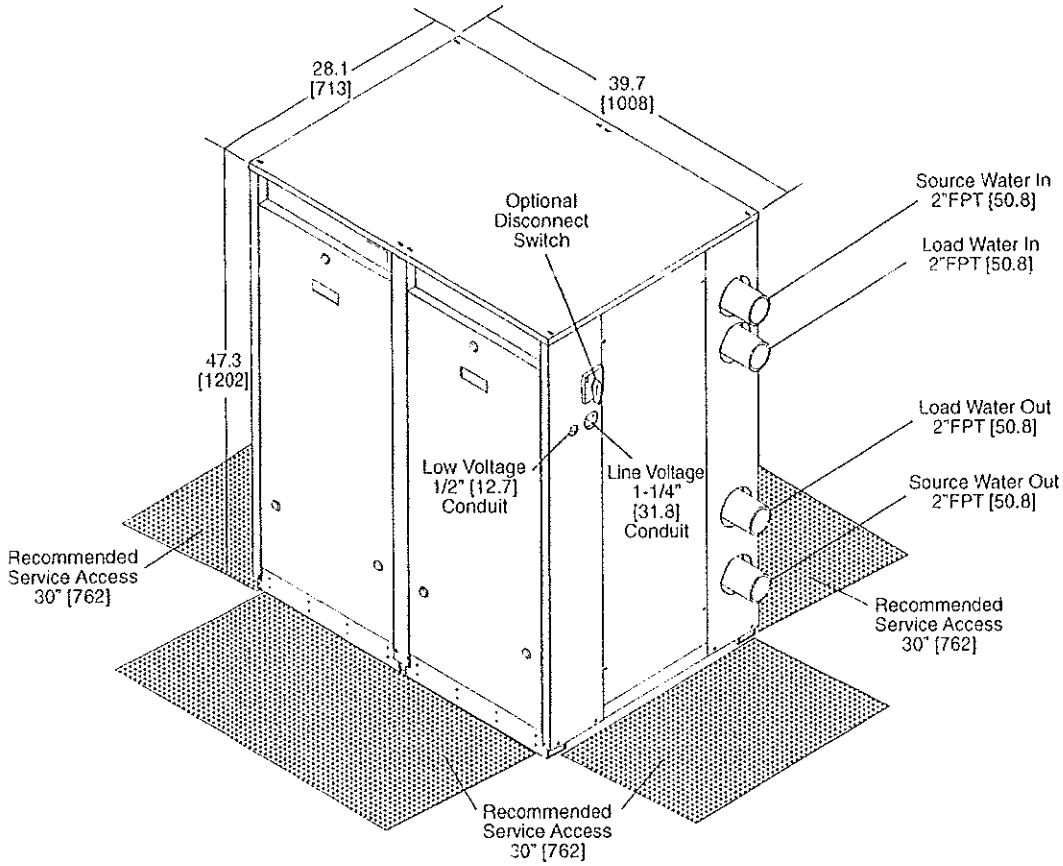

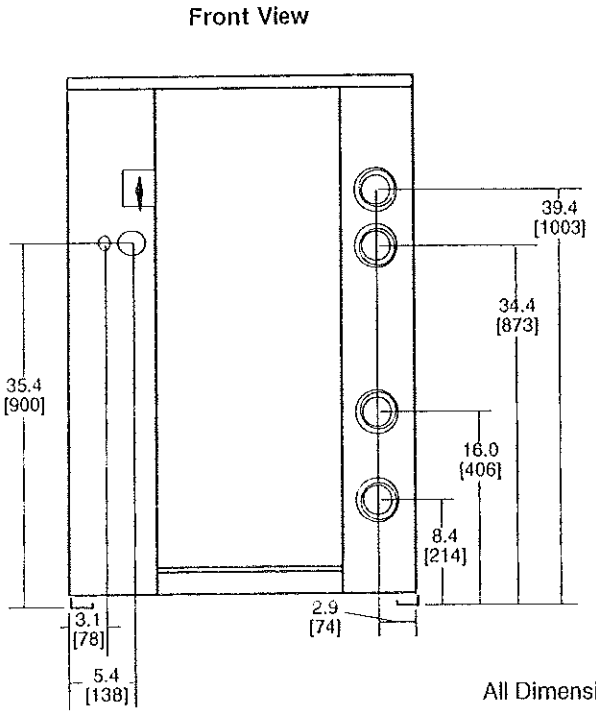

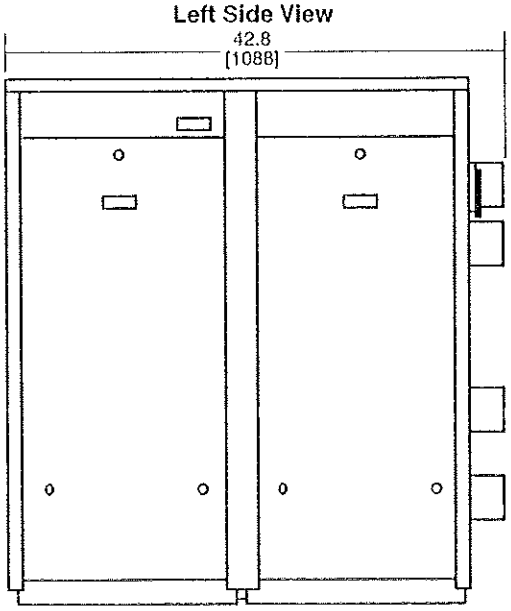

All Dimensions in inches [mm]

Rev.: 11/18/02B

ClimateMaster works continually to improve its products. As a result, the design and specifications of each product at the time of order may be changed without notice and may not be as described herein. Please contact ClimateMaster's Customer Service Department at 1-405-745-6000 for specific information on the current design and specifications. Statements and other information contained herein are not express warranties and do not form the basis of any bargain between the parties, but are merely ClimateMaster's opinion or commendation of its products. The latest version of this document is available at www.climatemaster.com.

GLW Submittal Data

CLIMATEMASTER®

Contractor: MAINE AIR CONDITIONING P.O.: _____

Engineer: MAINE AIR CONDITIONING

Project Name: USM Unit Tag: _____

GLW360 WIRING DIAGRAM
208-230/60/3, 460/60/3, 575/60/3,
380-420/50/3
WITH CXM

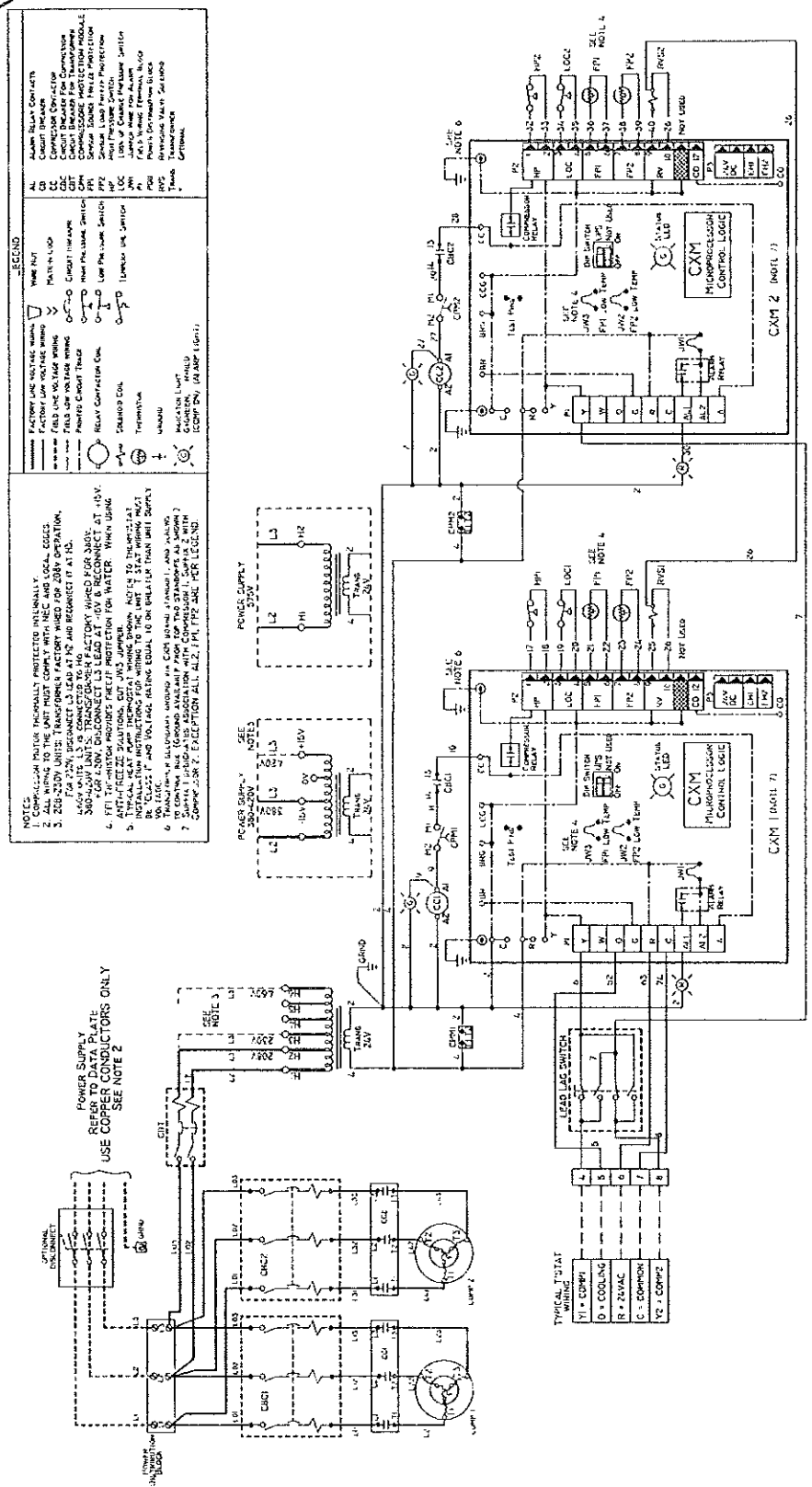

ClimateMaster works continually to improve its products. As a result, the design and specifications of each product at the time of order may be changed without notice and may not be as described herein. Please contact ClimateMaster's Customer Service Department at 1-405-745-6000 for specific information on the current design and specifications. Statements and other information contained herein are not express warranties and do not form the basis of any bargain between the parties, but are merely ClimateMaster's opinion or commendation of its products. The latest version of this document is available at www.climatemaster.com.

GLW Submittal Data

CLIMATEMASTER®

Contractor: MAINE AIR CONDITIONING P.O.: _____
Engineer: MAINE AIR CONDITIONING
Project Name: USM Unit Tag: _____

GENESIS SERIES
GLW - LARGE WATER TO WATER
ENGINEERING GUIDE
SPECIFICATIONS

Revision: 09/09/02 B

General
Furnish and install ClimateMaster Water to Water Heat Pumps, as indicated on the plans. Equipment shall be completely assembled, piped and internally wired. Capacities and characteristics as listed in the schedule and the specifications that follow.

Water to Water Source Heat Pumps:
Units shall be supplied completely factory built and capable of operation with an entering source water temperature range from 20° to 110°F (-6.6° to 43.3°C) as standard. Equivalent units from other manufacturers can be proposed provided approval to bid is given 10 days prior to bid closing. All equipment listed in this section must be rated in accordance with ARI/ISO/ASHRAE. The units shall have ETL Safety Listing label. All units shall be factory run tested. This testing shall generate a report card to be shipped with each unit stating performance in both heating and cooling modes. Serial numbers will be recorded by factory and furnished to contractor for ease of unit warranty status. Units tested without water flow ARE NOT acceptable.

Basic Construction
All units must have a minimum of four access panels for serviceability of compressor compartment. If other arrangements make servicing difficult, the contractor must provide access panels and clear routes to ease service. Architect must approve any changes in layout.

The water to water heat pumps shall be fabricated from heavy gauge painted sheet metal. All interior surfaces shall be lined with 1/2 inch thick, 1-1/2 lb. acoustic type glass fiber insulation.

~~*Option:*~~ *Mute package shall consist of sound attenuating blanket on each compressor to reduce the radiated noise.*

Cabinets shall have separate openings for entrance of line voltage and low voltage control wiring. Supply and return water connections for both load and source shall be copper FPT fittings. All water connections and electrical openings must be in the compressor compartment corner post as to not interfere with the serviceability of unit. Contractor must ensure that units can be easily removed for servicing and coordinate locations of electrical conduit and lights with the electrical contractor. Unit shall include closed cell insulation on the water circuit piping, water to refrigerant heat exchangers and all refrigerant piping (except compressor discharge tube. *Each unit must have 800 micron strainer installed on the source and load water piping.*

Refrigerant Circuit
Units shall have two sealed, isolated refrigerant circuits each including a high efficiency scroll compressor designed for heat pump operation, dedicated heating and cooling thermostatic expansion valves for refrigerant metering, a reversing valve, filter drier, two brazed plate refrigerant to water heat exchangers utilizing stainless steel plates, and safety controls including a high pressure switch, a low pressure sensor, and a low water temperature sensor. Access fittings shall be factory installed on each high and low pressure refrigerant lines to facilitate field service. Activation of any safety device shall prevent compressor operation via a lockout device. The lockout shall be reset at the contractor supplied disconnect switch.

The compressor will be mounted on external computer selected isolating springs. Compressor shall have thermal overload protection. Refrigerant to water heat exchangers shall be of brazed plate pipe with stainless steel plates, rated to withstand 435 PSIG working refrigerant pressure and 435 PSIG working water pressure.

Reversing valves shall be four-way solenoid activated refrigerant valves which shall fail to heating operation should the solenoid fail to function.

Electrical
A control box shall be located within the unit compressor compartment and shall contain a 75VA transformer (with primary side circuit breaker), 24 Volt activated, 3 pole compressor contactor, power block, terminal block for thermostat wiring and solid-state controller for complete unit operation. Electro-mechanical operation WILL NOT be accepted. Units shall be name-plated for use with time delay fuses or HACR circuit breakers. Unit controls shall be 24 Volt and provide heating or cooling as required by the remote thermostat/sensor. A compressor solid state protection module shall be supplied on each circuit for compressor overload protection. Circuit breakers shall be provided on each compressor power circuit for short circuit protection.

~~*Option:*~~ *Power disconnect switch shall be installed to provide convenient power disconnection on the front exterior of the unit.*

The Units shall have external cabinet mounted:
-Compressor "ON" LED to indicate compressor or unit operation
-Unit fault LED to indicate fault modes.
-Compressor lead/lag switch.

Solid-State Control System
Units shall employ a solid-state control systems (CXM) for each compressor circuit. The control shall interface with a (Y,O) thermostat, mechanical or electronic. The control system microprocessor board shall be specifically designed to protect against building electrical system noise contamination, EMI, and RFI interference. The control system shall have the following features:

ClimateMaster works continually to improve its products. As a result, the design and specifications of each product at the time of order may be changed without notice and may not be as described herein. Please contact ClimateMaster's Customer Service Department at 1-405-745-6000 for specific information on the current design and specifications. Statements and other information contained herein are not express warranties and do not form the basis of any bargain between the parties, but are merely ClimateMaster's opinion or commendation of its products. The latest version of this document is available at www.climatemaster.com

CITY OF PORTLAND, MAINE

Department of Building Inspections

6 13 20 04

Received from USM

Location of Work 15 Surrenden Road

Cost of Construction $

Permit Fee $ 30.00

Building (IL) ___ Plumbing (I5) ___ Electrical (I2) ___ Site Plan (U2) ___

Other

CBL: 1111 004

Check #: 23331 **Total Collected $** 30.00

THIS IS NOT A PERMIT

No work is to be started until PERMIT CARD is actually posted upon the premises. Acceptance of fee is no guarantee that permit will be granted. PRESERVE THIS RECEIPT. In case permit cannot be granted the amount of the fee will be refunded upon return of the receipt less $10.00 or 10% whichever is greater.

WHITE - Applicant's Copy
YELLOW - Office Copy
PINK - Permit Copy

a. Anti-short cycle time delay on compressor operation, time delay shall be 5 minutes minimum.
b. Random start on power up mode.
c. Low voltage protection.
d High voltage protection.
e. Unit shutdown on high or low refrigerant pressures.
f. Unit shutdown on low water temperature.
g. Source (FP1) or Load (FP2) heat exchanger low water temperature cutout (selectable for water or anti-freeze).
h. Option to reset unit at thermostat or disconnect. Fault type shall be retained in memory if reset at thermostat.
i. Automatic intelligent reset. Unit shall automatically reset 5 minutes after trip if the fault has cleared. Should a fault re-occur 3 times sequentially then permanent lockout will occur.
j. Ability to defeat time delays for servicing.
k. Light emitting diodes (LED) to indicate high pressure, low pressure, low voltage, high voltage, low water temperature cut-out, condensate overflow and control status.
l. The low pressure switch SHALL NOT be monitored for the first 120 seconds after a compressor start command to prevent nuisance safety trips.
m. Remote fault type indication at thermostat.
n. Selectable 24V or pilot duty dry contact alarm output.
o. 24V output to cycle a motorized water valve with compressor contactor.

Option: Enhanced control features (DXM) Control shall have all the features of the CXM control with the following additional features:
a. A removable thermostat connector.
b. Random start on return from night setback.
c. Minimized reversing valve operation for extended life and quiet operation.
d. Night setback control from low temperature thermostat, with 2-hour override initiated by a momentary signal from the thermostat.
e. Dry contact night setback output for digital night setback thermostats.
f. Ability to work with heat/cool (Y, W) thermostats.
g. Ability to work with heat pump thermostats using O or B reversing valve control.
h. Single grounded wire to initiate night setback, or emergency shutdown.
i. Control board shall allow up to 3 units to be operated from one thermostat without any auxiliary controls.
j. A relay to restart a central pump or control a 24V motorized water valve.

Option: LonWorks Control System
Units shall have all the features listed above and the control board will be supplied with a LonWorks interface board. This will permit all units to be daisy chain connected by a 2-wire twisted pair shielded cable. The following points must be available at a central or remote computer location:
a. space temperature.
b. source leaving water temperature.
c. load leaving water temperature.
d. command of temperature setpoint.
e. cooling status.
f. heating status.
g. unoccupied/occupied command.
h. compressor shutdown (load shedding) command.
i. emergency shutdown command.
j. cooling command.
k. heating command.

Field Installed Options

Hose Kits
All units shall be connected with hoses. The hoses shall be 2 feet long, braided stainless steel; fire rated hoses complete with adapters. Only fire rated hoses will be accepted.

ClimateMaster works continually to improve its products. As a result, the design and specifications of each product at the time of order may be changed without notice and may not be as described herein. Please contact ClimateMaster's Customer Service Department at 1-405-745-6000 for specific information on the current design and specifications. Statements and other information contained herein are not express warranties and do not form the basis of any bargain between the parties, but are merely ClimateMaster's opinion or commendation of its products. The latest version of this document is available at www.climatemaster.com.