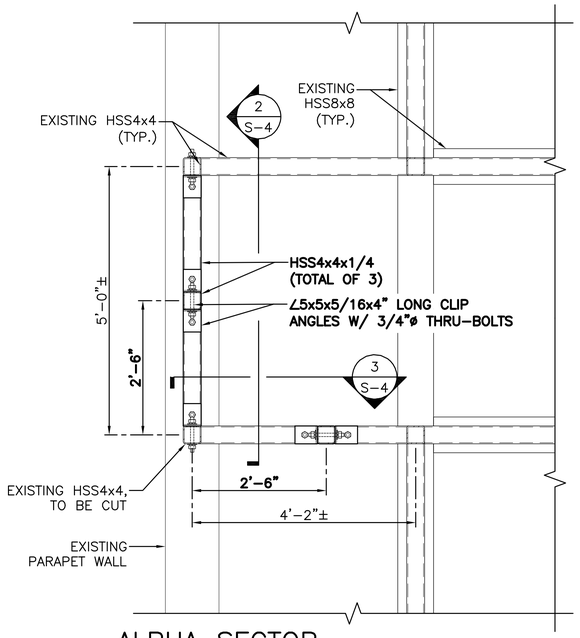

1 ALPHA SECTOR STEEL MODIFICATION PLAN

SCALE: N.T.S.

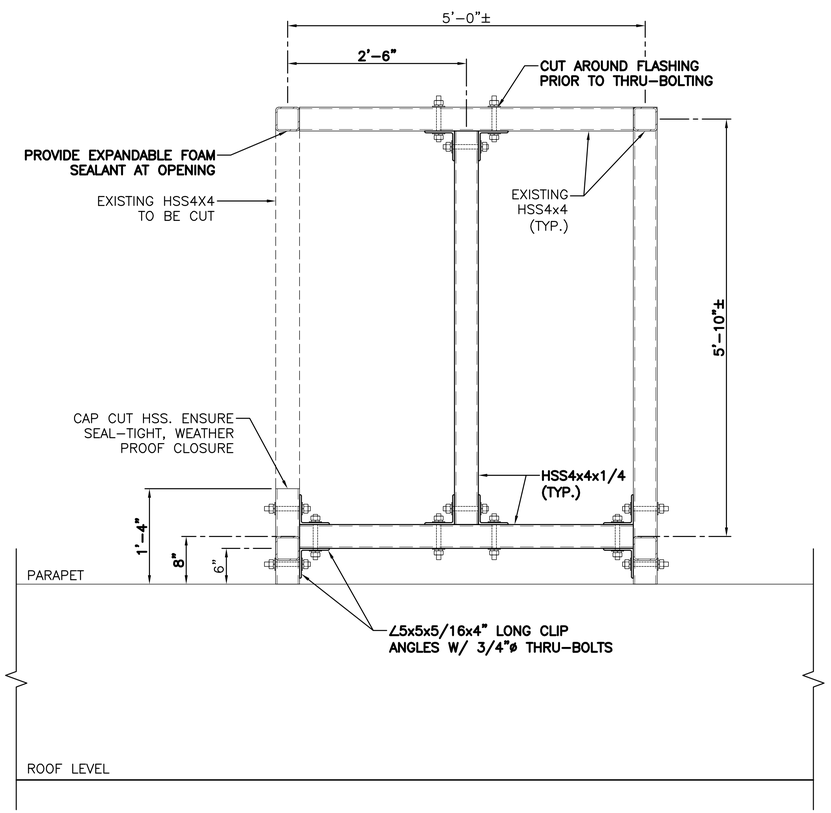

2 SECTION

SCALE: N.T.S.

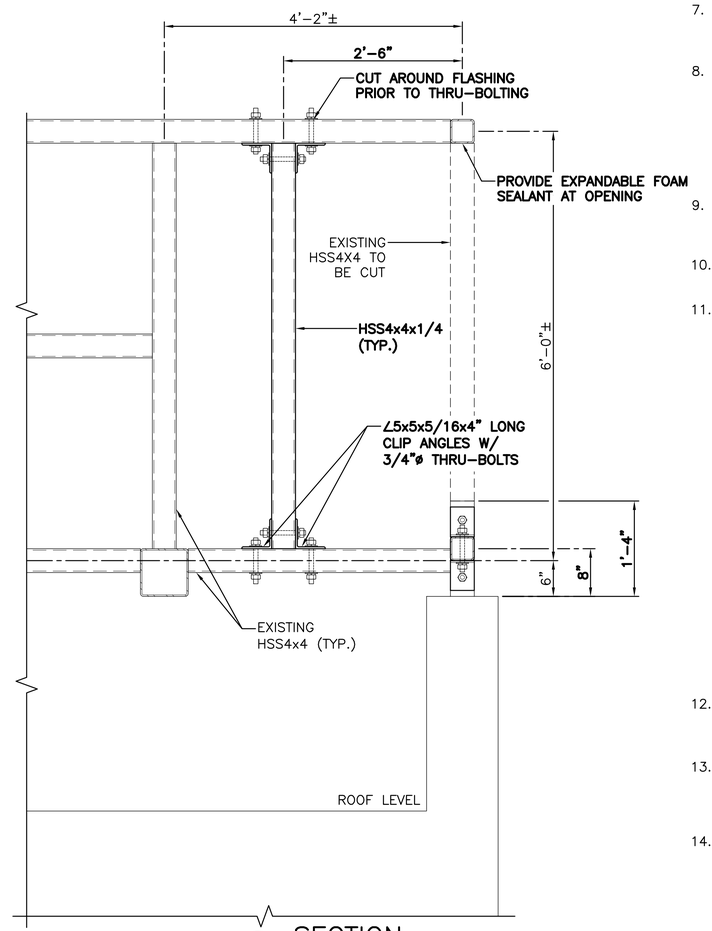

3 SECTION

SCALE: N.T.S.

STRUCTURAL STEEL NOTES

STRUCTURAL STEEL FRAMING

1. THE CONTRACTOR SHALL FIELD VERIFY ALL DIMENSIONS, ELEVATIONS, AND EXISTING CONDITIONS PRIOR TO FABRICATION.

2. THE WORK SHALL CONFORM TO THE CODES AND STANDARDS OF THE FOLLOWING AGENCIES AS FURTHER CITED HEREIN:

   AWS: AMERICAN WELDING SOCIETY INC., 550 NW LEJEUNE RD, MIAMI FL 33126 USA AS PUBLISHED IN "STANDARD D1.1, STRUCTURAL WELDING CODE", 2004 OR LATER EDITION.

   AISC 13TH EDITION: AMERICAN INSTITUTE FOR STEEL CONSTRUCTION, AS PUBLISHED IN "CODE FOR STANDARD PRACTICE FOR STEEL BUILDINGS AND BRIDGES": "SPECIFICATIONS FOR THE DESIGN, FABRICATION AND ERECTION OF STRUCTURAL STEEL FOR BUILDINGS"

3. STRUCTURAL STEEL SHALL BE NEW STEEL CONFORMING TO THE FOLLOWING:

W-SHAPE	ASTM A992, GRADE 50
OTHER STEEL	ASTM A36, U.N.O.
STRUCTURAL TUBE	ASTM A500, GRADE B, Fy=46 ksi
STRUCTURAL PIPE	ASTM A53, GRADE B
HIGH STRENGTH BOLTS	ASTM A325 TYPE X U.N.O.
WELDING	AWS A5.1 E70XX ELECTRODES

4. STRUCTURAL STEEL FRAMING SHALL BE TRUE AND PLUMB BEFORE CONNECTIONS ARE FINAL FOR BOLTING OR WELDING.

5. FIELD CUTTING OR ANY MODIFICATIONS OF STRUCTURAL STEEL SHALL NOT BE MADE WITHOUT PRIOR WRITTEN APPROVAL BY THE ENGINEER FOR EACH SPECIFIC CASE.

6. WELDING SHALL CONFORM TO AMERICAN WELDING SOCIETY (AWS) D1.1 "STRUCTURAL WELDING CODE" USING E70XX ELECTRODES.

7. WELD SHALL DEVELOP THE FULL STRENGTH OF THE MATERIAL BEING WELDED, UNLESS NOTED OTHERWISE, EXCEPT THAT FILLET WELD SHALL BE A MINIMUM OF 3/16".

8. PROVIDE TEMPORARY ERECTION BRACING AND SUPPORTS TO HOLD STRUCTURAL STEEL FRAMING SECURELY IN POSITION. SUCH TEMPORARY BRACING AND SUPPORTS SHALL NOT BE REMOVED UNTIL PERMANENT BRACING OR STABILIZING ELEMENTS HAVE BEEN INSTALLED. CHECK ALL TEMPORARY LOADS AND STAY WITHIN SAFE CAPACITY OF ALL BUILDING COMPONENTS. DESIGN OF ALL TEMPORARY ERECTION BRACING IS BY THE ERECTION CONTREACTOR AND IS NOT INCLUDED HEREIN.

9. ALL STRUCTURAL STEEL INCLUDING PLATES, ANGLES AND CONNECTION MATERIAL SHALL BE GALVANIZED IN ACCORDANCE WITH THE ASTM A123 AND A153.

10. ALL A325 BOLTS, NUTS, AND WASHERS TO BE GALVANIZED IN ACCORDANCE WITH ASTM A153, A384, AND A563.

11. CONNECTIONS SHOWN ON THESE DRAWINGS ARE GENERALLY SCHEMATIC. THEY ARE INTENDED TO DEFINE THE SPACIAL RELATIONSHIP OF THE FRAMED MEMBERS AND SHOW A FEASIBLE METHOD OF MAKING THE CONNECTION. ANY CONNECTION THAT IS NOT SHOWN OR IS NOT COMPLETELY DETAILED ON THE STRUCTURAL DRAWINGS SHALL BE DESIGNED BY AN ENGINEER, REGISTERED IN THE STATE WHERE CONSTRUCTION OCCURS, AND RETAINED BY THE FABRICATION. WHERE PARTIAL INFORMATION IS GIVEN, IT SHALL BE THE MINIMUM REQUIREMENT FOR THE CONNECTION. BOLTED CONNECTIONS SHALL BE AS FOLLOWS:

    A. MINIMUM BOLT DIAMETER = 3/4" U.N.O.

    B. MINIMUM NUMBER OF BOLTS = 2 (PER SIDE OF CONNECTION)

    C. EXCEPT WHERE SHOWN, ALL BEAM TO BEAM AND BEAM TO COLUMN CONNECTIONS TO BE DOUBLE ANGLE BEARING TYPE CONNECTIONS WITH HIGH STRENGTH BOLTS (THREADS EXCLUDED FROM THE SHEAR PLANE) AND HARDENED WASHERS.

    D. PROVIDE MINIMUM NUMBER OF BOLT ROWS AS FOLLOWS:
    W8, W10 – 2 ROWS
    W12 – 3 ROWS
    W14, W16, W18 – 4 ROWS
    W21, W24 – 6 ROWS

12. ALL WELDING SHALL BE DONE BY CERTIFIED WELDERS. CERTIFICATION DOCUMENTS SHOULD BE MADE AVAILABLE FOR ENGINEER'S AND/OR WIRELESS CARRIER'S REVIEW IF REQUESTED.

13. WELDING ELECTRODES FOR MANUAL SHIELDED METAL ARC PROCESS SHALL CONFORM TO ASTM A-233. E70 SERIES BARE ELECTRODES AND GRANULAR FLUX USED IN THE SUBMERGED ARC PROCESS SHALL CONFORM TO AISC SPECIFICATIONS.

14. INSPECTION AND TESTING OF WELDING: FIELD WELDING SHALL BE DONE UNDER INSPECTION IN ACCORDANCE WITH THE AWS D1.1. REQUIREMENTS. VISUAL INSPECTION IS ACCEPTABLE WHEN FILLET SIZES ARE NOT SHOWN.

    A. UPON COMPLETION OF ERECTION INSPECT ALL GALVANIZED STEEL AND PAINT. COAT ANY FIELD CUTS, WELDS OR GALVANIZATION BREAKS WITH ZRC COLD GALVANIZING COMPOUND OR EQUAL PRIOR TO ASSEMBLY.

PREPARED BY:

NEXIUS
TRANSFORM YOUR BUSINESS...THROUGH WIRELESS

A&E OFFICE:
7A LYBERTY WAY
WESTFORD, MA 01886
1 (972) 755-1882

CLIENT:

verizon

CELLCO PARTNERSHIP d/b/a
VERIZON WIRELESS
118 FLANDERS ROAD, 3RD FLOOR
WESTBOROUGH, MA 01581

STATE OF MAINE
RONALD J. JACKSON
3773
LICENSED
PROFESSIONAL ENGINEER

Ronald J. Jackson

THIS DOCUMENT IS THE DESIGN PROPERTY AND COPYRIGHT OF NEXIUS AND FOR THE EXCLUSIVE USE BY THE TITLE CLIENT. DUPLICATION OR USE WITHOUT THE EXPRESS WRITTEN CONSENT OF THE CREATOR IS STRICTLY PROHIBITED.

DRAWING SCALES ARE INTENDED FOR 24"x36" SIZE PRINTED MEDIA ONLY. ALL OTHER PRINTED SIZES ARE DEEMED "NOT TO SCALE".

SUBMITTALS

REV	DATE	DESCRIPTION	BY
0	03/01/17	FOR REVIEW	JM
1	03/13/17	REVISED PER COMMENTS	JM
2	04/07/17	REVISED FOR CONSTRUCTION	JM

SITE INFO:

SITE NAME:
PORTLAND_8_ME

LOCATION CODE:
380405

SITE ADDRESS:
44 BEDFORD STREET
PORTLAND, ME 04101
CUMBERLAND COUNTY

SHEET TITLE:
STRUCTURAL DETAILS & NOTES

NEXIUS PROJ. NO: **VZ11509**

CHECKED BY: JC

CHECKED BY DATE: 03/01/17

SHEET NUMBER: **S-4**

Reviewed for Code Compliance Inspections Division Approved as Noted
Date: 08/16/17