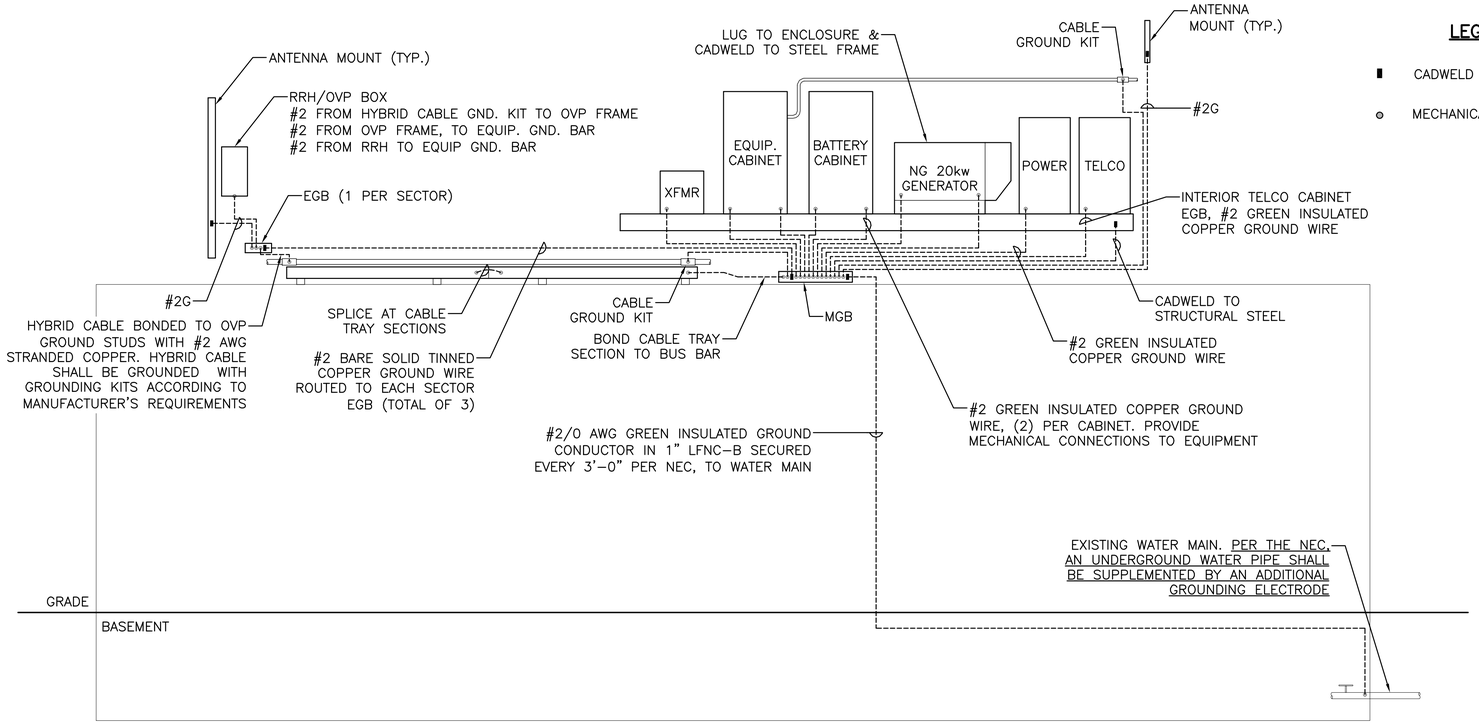

1 GROUNDING RISER DIAGRAM

SCALE: N.T.S.

LEGEND

- ■ CADWELD CONNECTION
- ⊙ MECHANICAL CONNECTION

GROUNDING NOTES

1. ALL ELECTRICAL AND GROUNDING AT THE SITE SHALL COMPLY WITH THE NATIONAL ELECTRICAL CODE, (NEC) NFPA 70, (NATIONAL FIRE PROTECTION ASSOCIATION).
2. ALL GROUND WIRE SHALL BE INSULATED GREEN COPPER #2 AWG UNLESS OTHERWISE NOTED.
3. ALL GROUND WIRES SHALL PROVIDE A STRAIGHT, DOWNWARD PATH TO GROUND WITH GRADUAL BENDS AS REQUIRED. GROUND WIRES SHALL NOT BE LOOPED OR SHARPLY BENT.
4. ELECTRICAL CONTRACTOR SHALL COORDINATE CONNECTIONS TO EXISTING GROUND ELECTRODE WITH SITE CONSTRUCTION MANAGER.
5. EACH EQUIPMENT CABINET SHALL BE CONNECTED TO THE MASTER ISOLATION GROUND BAR (MIGB) WITH #2 AWG INSULATED STRANDED COPPER WIRE. EQUIPMENT CABINETS SHALL EACH HAVE (2) CONNECTIONS, UNLESS NOTED OTHERWISE.
6. PROVIDE DEDICATED #2 AWG COPPER GROUND WIRE FROM EACH ANTENNA MOUNTING PIPE TO ASSOCIATED CIGBE (TYPICAL FOR FOUR MOUNTING PIPES PER SECTOR).
7. ANTENNA GROUND KITS SHALL BE FURNISHED BY VERIZON WIRELESS AND INSTALLED BY ELECTRICAL CONTRACTOR.
8. THE GROUND SYSTEM SHALL BE TESTED AND SHALL HAVE A RESISTANCE OF 5 OHMS OR LESS.
9. ALL RECEPTACLES AND EQUIPMENT CIRCUITS SHALL BE GROUNDED USING A FULL-SIZE EQUIPMENT GROUNDING CONDUCTOR RUN WITH THE CURRENT CONDUCTORS
10. ALL #6 STRANDED COPPER WITH GREEN INSULATION TO BE ATTACHED WITH CRIMPED DOUBLE LUG BOLTED ATTACHED WITH CAD PLATED BOLTS AND STAR WASHERS (TYPICAL). NO OX-GREASE
11. IF THE AC PANEL IN THE POWER CABINET IS WIRED AS SERVICE ENTRANCE THE AC SERVICE GROUND CONDUCTOR SHALL BE CONNECTED TO THE GROUND ELECTRODE SYSTEM. WHEN THE AC PANEL IN THE POWER CABINET IS CONSIDERED A SUB-PANEL, THE GROUND WIRE SHALL BE INSTALLED IN THE AC POWER CONDUIT , THE INSTALLATION SHALL BE PER LOCAL AND NATIONAL ELECTRIC CODE (NFPA-70)
12. EXOTHERMIC WELDING IS RECOMMENDED FOR GROUNDING CONNECTION WHERE PRACTICAL. OTHERWISE, THE CONNECTION SHALL BE MADE USING COMPRESSION TYPE-2 HOLES, LONG BARREL LUGS OR DOUBLE CRIMP "C" CLAMP. THE COPPER CABLES SHALL BE COATED WITH ANTIOXIDANT (COPPER SHIELD) BEFORE MAKING THE CRIMP CONNECTIONS. THE MANUFACTURER'S TORQUING RECOMMENDATIONS ON THE BOLT ASSEMBLY TO SECURE CONNECTIONS ARE TO BE FOLLOWED.
13. THE ANTENNA CABLES SHALL BE GROUNDED AT THE TOP AND BOTTOM OF THE VERTICAL RUN FOR LIGHTNING PROTECTION. THE ANTENNA CABLE SHIELD SHALL BE BONDED TO A COPPER GROUND BUS AT THE LOWERMOST POINT OF A VERTICAL RUN JUST BEFORE IT BEGINS TO BEND TOWARD THE HORIZONTAL PLANE. WIRE RUNS TO GROUND SHALL BE KEPT AS STRAIGHT AND SHORT AS POSSIBLE. THE ANTENNA CABLE SHIELD SHALL BE GROUNDED JUST BEFORE ENTERING THE MINICELL. ANY ANTENNA CABLES OVER 200 FEET IN LENGTH SHALL ALSO BE EQUIPPED WITH ADDITIONAL GROUNDING AT MID-POINT.
14. THE MASTER GROUND BUS (MGB) SHALL BE MADE OF BARE 1/4"X4" GALVANIZED AND LARGE ENOUGH TO ACCOMMODATE THE REQUIRED NUMBER OF GROUND CONNECTIONS. THE HARDWARE SECURING THE MGB SHALL ELECTRICALLY INSULATE THE MGB FROM ANY STRUCTURE TO WHICH IT IS FASTENED.
15. GROUND CONNECTIONS: CLEAN SURFACES THOROUGHLY BEFORE APPLYING GROUND LUGS OR CLAMPS. IF SURFACE IS COATED, THE COATING MUST BE REMOVED DOWN TO THE BARE METAL. AFTER THE COATING HAS BEEN REMOVED, APPLY A NON-CORROSIVE APPROVED COMPOUND TO THE CLEANED SURFACE AND INSTALL LUGS OR CLAMPS. WHERE GALVANIZING IS REMOVED FROM METAL, IT SHALL BE PAINTED OR TOUCHED UP WITH "GALVAMOX", OR EQUAL.

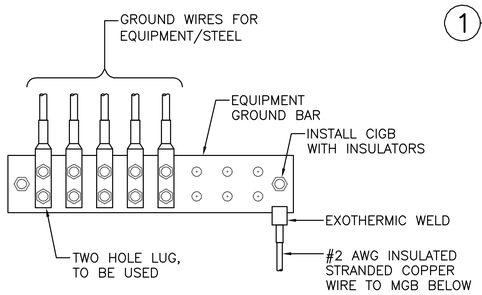

2 EQUIPMENT GROUND BAR DETAIL

SCALE: N.T.S.

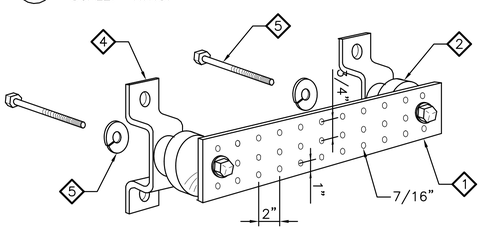

	LEGEND
1	HOT-DIPPED GALV. STEEL GROUND BAR, 1/4"X4"X24", HOLE CENTER TO MATCH NEMA DOUBLE LUG CONFIGURATION
2	INSULATORS
3	3/8" LOCK WASHERS
4	WALL MOUNTING BRACKET
5	3/8"-11x1" H.H.C.S. BOLTS

3 STANDARD GROUND BAR DETAIL

N/A

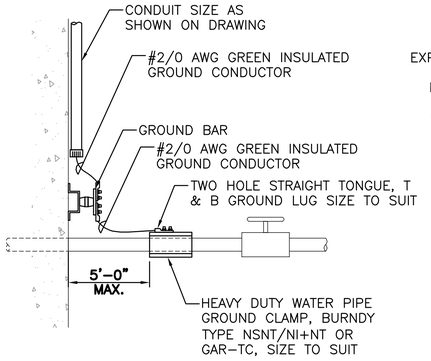

4 GROUND CONNECTION AT WATER MAIN DETAIL

SCALE: N.T.S.

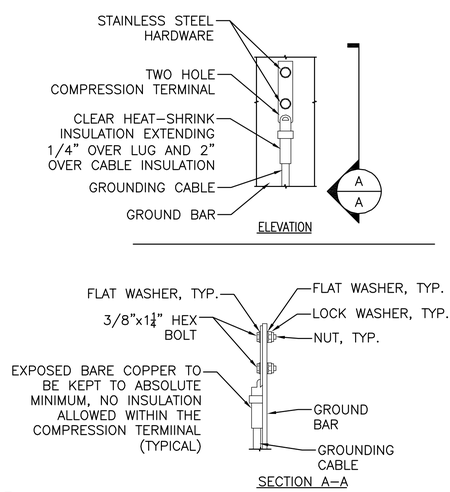

NOTE:

1. "DOUBLING UP" OR "STACKING" OF CONNECTION IS NOT PERMITTED.
2. OXIDE INHIBITING COMPOUND TO BE USED AT ALL LOCATIONS.
3. CADWELD DOWNLEADS FROM UPPER EGB, LOWER EGB AND MGB.

5 GROUND BAR CONNECTIONS DETAIL

N/A

PREPARED BY:

NEXIUS

TRANSFORM YOUR BUSINESS...THROUGH WIRELESS

A&E OFFICE:
7A LYBERTY WAY
WESTFORD, MA 01886
1 (972) 755-1882

CLIENT:

verizon

CELLCO PARTNERSHIP d/b/a
VERIZON WIRELESS
118 FLANDERS ROAD, 3RD FLOOR
WESTBOROUGH, MA 01581

STATE OF MAINE
RONALD J. JACKSON
3773
LICENSED
PROFESSIONAL ENGINEER

Ronald J. Jackson

Reviewed for Code Compliance
Inspectional Services
Approved as Noted
Date: 08/16/17

THIS DOCUMENT IS THE DESIGN PROPERTY AND COPYRIGHT OF NEXIUS AND FOR THE EXCLUSIVE USE BY THE TITLE CLIENT. DUPLICATION OR USE WITHOUT THE EXPRESS WRITTEN CONSENT OF THE CREATOR IS STRICTLY PROHIBITED.

DRAWING SCALES ARE INTENDED FOR 24"x36" SIZE PRINTED MEDIA ONLY. ALL OTHER PRINTED SIZES ARE DEEMED "NOT TO SCALE".

SUBMITTALS

REV	DATE	DESCRIPTION	BY
0	03/01/17	FOR REVIEW	JM
1	03/13/17	REVISED PER COMMENTS	JM
2	04/07/17	REVISED FOR CONSTRUCTION	JM

SITE INFO:

SITE NAME:
PORTLAND_8_ME

LOCATION CODE:
380405

SITE ADDRESS:
44 BEDFORD STREET
PORTLAND, ME 04101
CUMBERLAND COUNTY

SHEET TITLE:
GROUNDING DETAILS & NOTES

NEXIUS PROJ. NO: **VZ11509**

SHEET NUMBER: E-2

CHECKED BY: MS

CHECKED BY DATE: 03/01/17