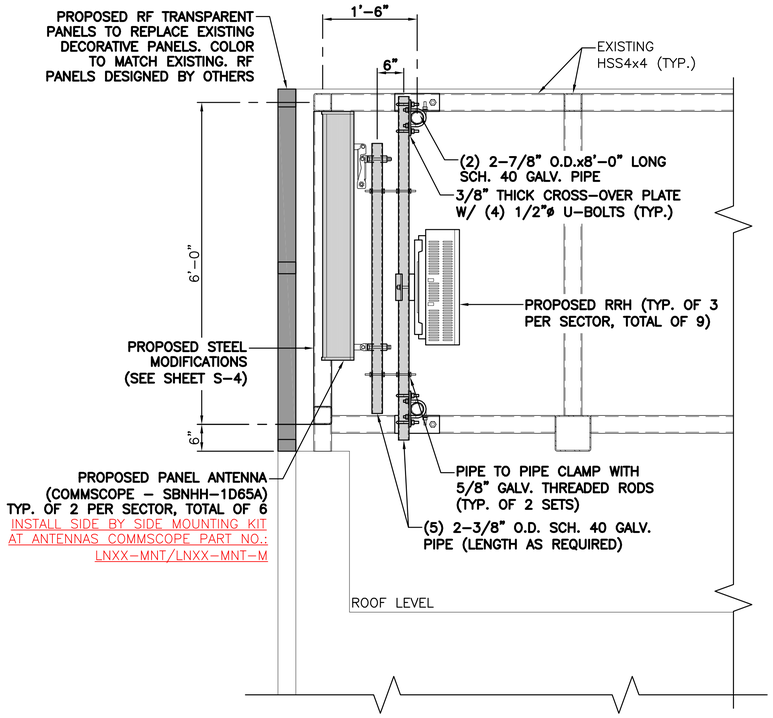

1 ALPHA ANTENNA MOUNTING DETAIL
SCALE: N.T.S.

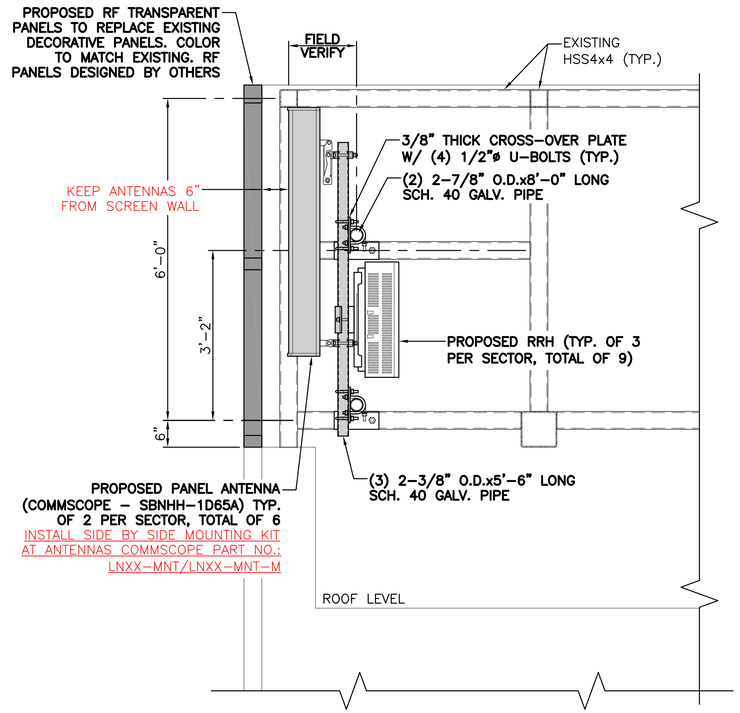

2 BETA ANTENNA MOUNTING DETAIL
SCALE: N.T.S.

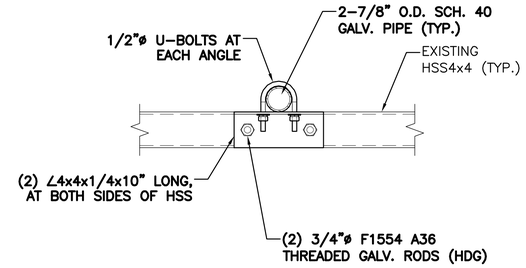

3 DETAIL
SCALE: N.T.S.

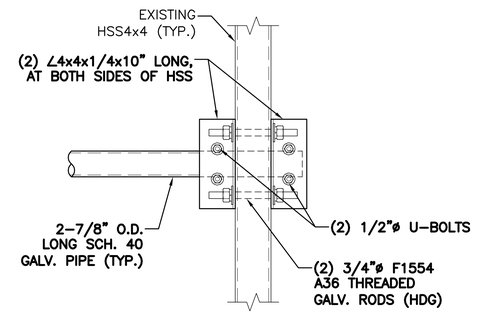

4 DETAIL
SCALE: N.T.S.

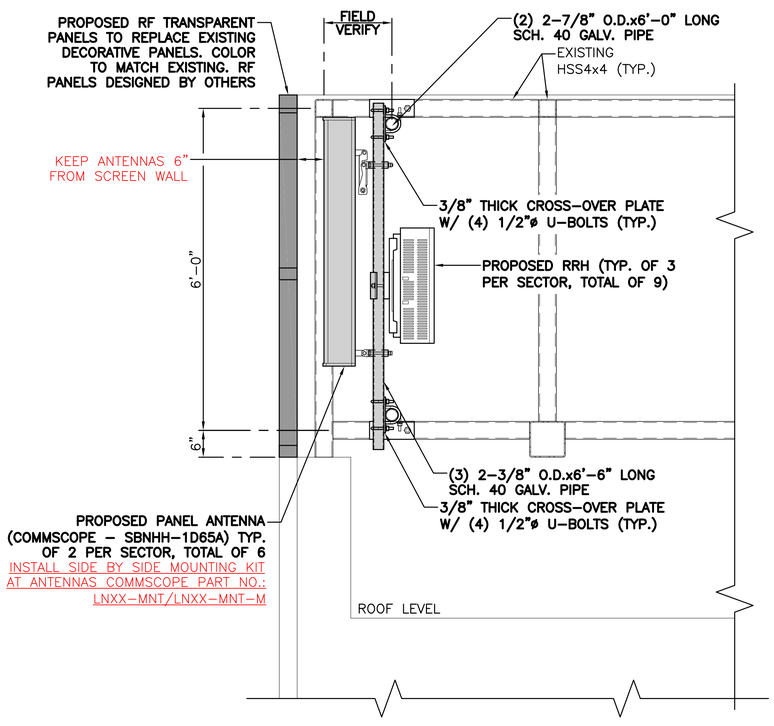

5 GAMMA ANTENNA MOUNTING DETAIL
SCALE: N.T.S.

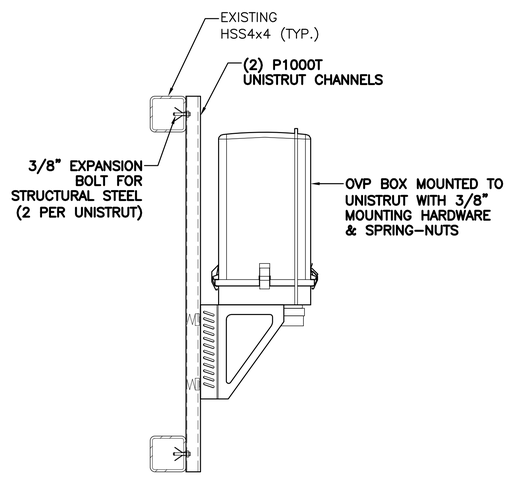

6 OVP MOUNTING DETAIL
SCALE: N.T.S.

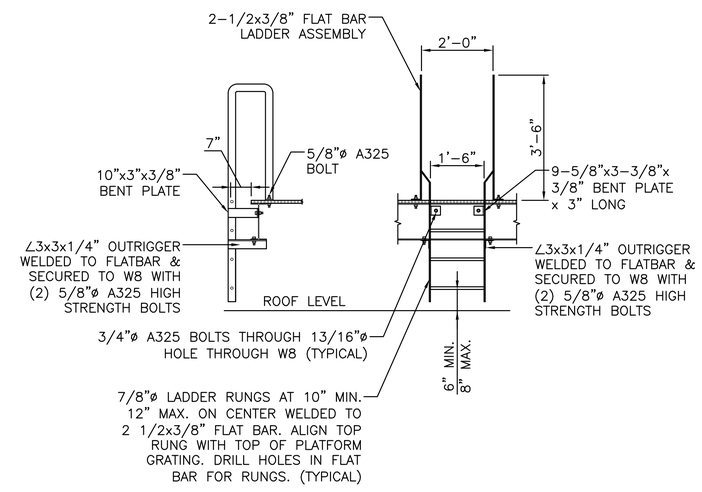

7 PLATFORM LADDER DETAIL
SCALE: N.T.S.

PREPARED BY:

NEXIUS
TRANSFORM YOUR BUSINESS...THROUGH WIRELESS

A&E OFFICE:
7A LYBERTY WAY
WESTFORD, MA 01886
1 (972) 755-1882

CLIENT:

verizon

CELLCO PARTNERSHIP d/b/a
VERIZON WIRELESS
118 FLANDERS ROAD, 3RD FLOOR
WESTBOROUGH, MA 01581

STATE OF MAINE
RONALD J. JACKSON
3773
LICENSED
PROFESSIONAL ENGINEER

Ronald J. Jackson

Reviewed for Code Compliance
Inspectional Services
Department of Building
Date: 08/16/17

THIS DOCUMENT IS THE DESIGN PROPERTY AND COPYRIGHT OF NEXIUS AND FOR THE EXCLUSIVE USE BY THE TITLE CLIENT. DUPLICATION OR USE WITHOUT THE EXPRESS WRITTEN CONSENT OF THE CREATOR IS STRICTLY PROHIBITED.

DRAWING SCALES ARE INTENDED FOR 24"x36" SIZE PRINTED MEDIA ONLY. ALL OTHER PRINTED SIZES ARE DEEMED "NOT TO SCALE".

SUBMITTALS

REV	DATE	DESCRIPTION	BY
0	03/01/17	FOR REVIEW	JM
1	03/13/17	REVISED PER COMMENTS	JM
2	04/07/17	REVISED FOR CONSTRUCTION	JM

SITE INFO:

SITE NAME:
PORTLAND_8_ME

LOCATION CODE:
380405

SITE ADDRESS:
44 BEDFORD STREET
PORTLAND, ME 04101
CUMBERLAND COUNTY

SHEET TITLE:
STRUCTURAL DETAILS

NEXIUS PROJ. NO: **VZ11509**

CHECKED BY: JC

CHECKED BY DATE: 03/01/17

SHEET NUMBER: **S-2**