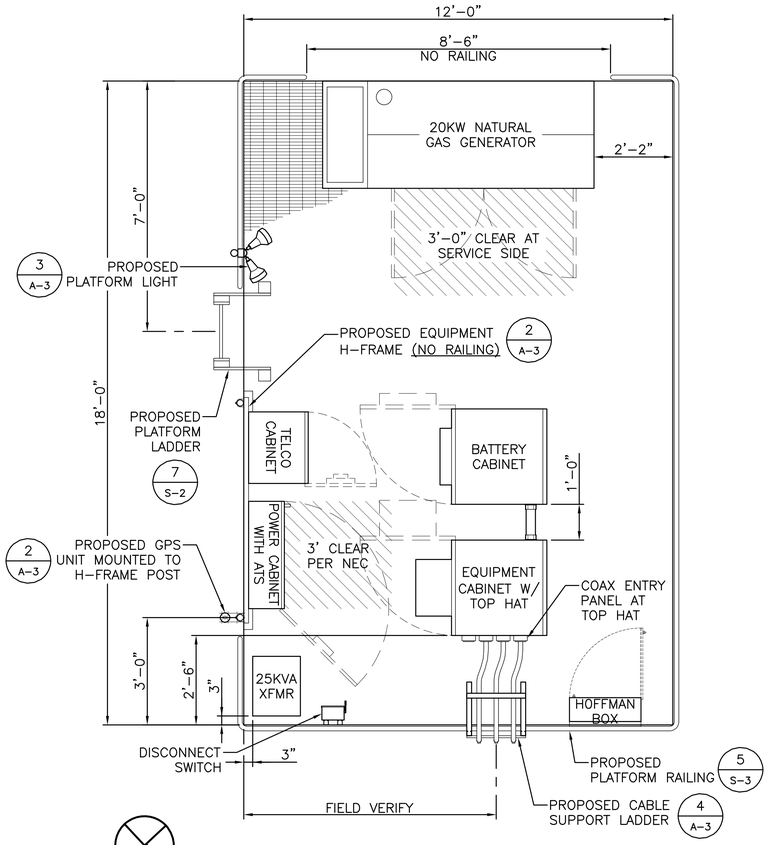

1 EQUIPMENT PLAN
SCALE: N.T.S.

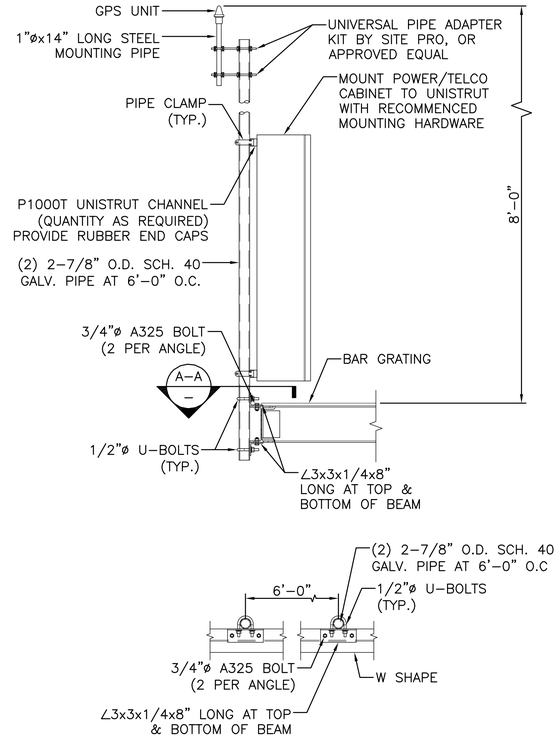

SECTION A-A

2 H-FRAME DETAIL
SCALE: N.T.S.

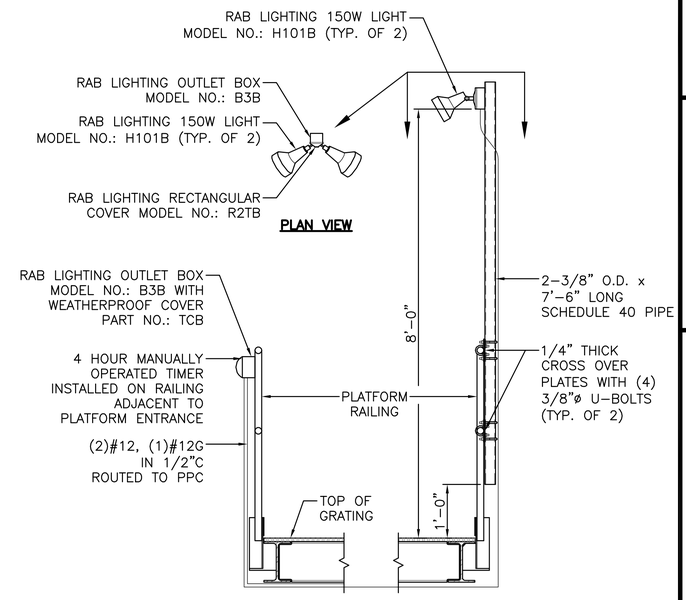

NOTE:
CONDUIT SITE & CONDUCTORS SHOWN NOT TO EXCEED 30 FEET IN LENGTH FROM POWER CABINET TO LIGHT FIXTURE.

3 PLATFORM LIGHT DETAIL
SCALE: N.T.S.

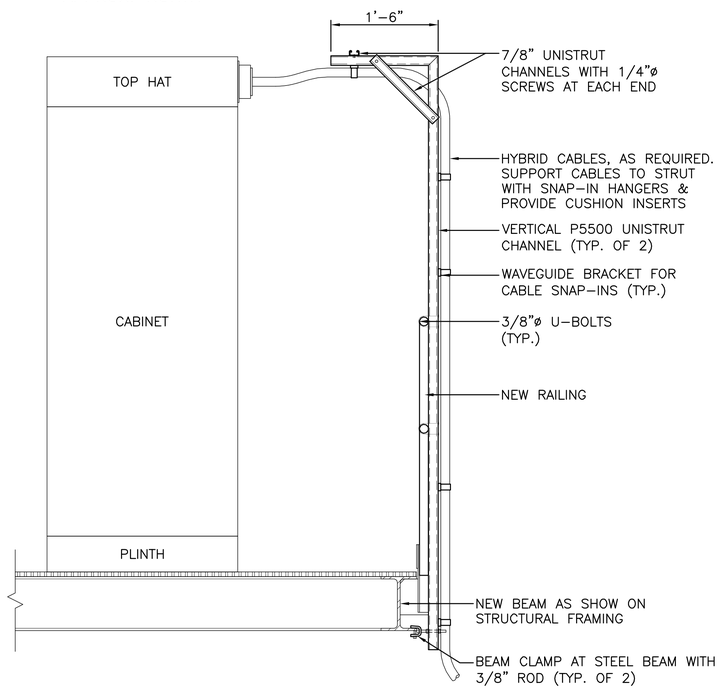

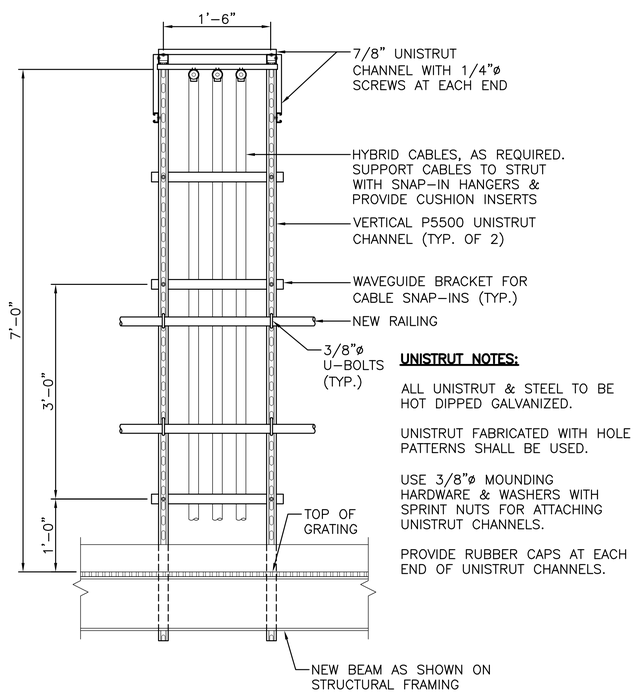

UNISTRUT NOTES:

ALL UNISTRUT & STEEL TO BE HOT DIPPED GALVANIZED.

UNISTRUT FABRICATED WITH HOLE PATTERNS SHALL BE USED.

USE 3/8"ø MOUNDING HARDWARE & WASHERS WITH SPRINT NUTS FOR ATTACHING UNISTRUT CHANNELS.

PROVIDE RUBBER CAPS AT EACH END OF UNISTRUT CHANNELS.

4 CABLE LADDER DETAIL
SCALE: N.T.S.

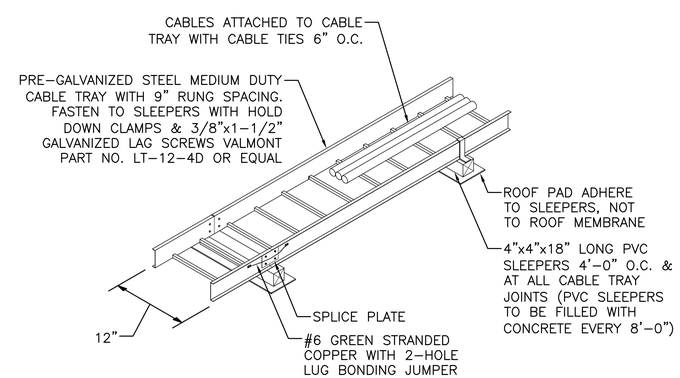

5 CABLE TRAY DETAIL
SCALE: N.T.S.

PREPARED BY:

NEXIUS
TRANSFORM YOUR BUSINESS...THROUGH WIRELESS

A&E OFFICE:
7A LYBERTY WAY
WESTFORD, MA 01886
1 (972) 755-1882

CLIENT:

verizon

CELLCO PARTNERSHIP d/b/a
VERIZON WIRELESS
118 FLANDERS ROAD, 3RD FLOOR
WESTBOROUGH, MA 01581

STATE OF MAINE
RONALD J. JACKSON
3773
LICENSED
PROFESSIONAL ENGINEER

Reviewed for Code Compliance
Inspectors Signature
Date: 08/16/17

THIS DOCUMENT IS THE DESIGN PROPERTY AND COPYRIGHT OF NEXIUS AND FOR THE EXCLUSIVE USE BY THE TITLE CLIENT. DUPLICATION OR USE WITHOUT THE EXPRESS WRITTEN CONSENT OF THE CREATOR IS STRICTLY PROHIBITED.

DRAWING SCALES ARE INTENDED FOR 24"x36" SIZE PRINTED MEDIA ONLY. ALL OTHER PRINTED SIZES ARE DEEMED "NOT TO SCALE".

SUBMITTALS

REV	DATE	DESCRIPTION	BY
0	03/01/17	FOR REVIEW	JM
1	03/13/17	REVISED PER COMMENTS	JM
2	04/07/17	REVISED FOR CONSTRUCTION	JM

SITE INFO:

SITE NAME:
PORTLAND_8_ME

LOCATION CODE:
380405

SITE ADDRESS:
44 BEDFORD STREET
PORTLAND, ME 04101
CUMBERLAND COUNTY

SHEET TITLE:
EQUIPMENT PLAN & CONSTRUCTION DETAILS

NEXIUS PROJ. NO:
VZ11509

CHECKED BY:
KB

CHECKED BY DATE:
03/01/17

SHEET NUMBER:
A-3