NEXIUS

Accelerating Network and Business Transformation

Reviewed for Code Compliance
Inspections Division
Approved with Conditions
Date: 08/16/17

APRIL 10, 2017

Verizon Wireless
400 Friberg Parkway
Westborough, MA 01581

RE: PORTLAND 8 ME
44 Bedford street, Portland ME 04101

To whom it may concern:

Nexius, Inc. has performed the structural analysis for new proposed steel framing modification as shown to support new Verizon Wireless (VZW) equipment. VZW equipment includes panel antennas and other appurtenances and their attachments that will support the Verizon Wireless proposed equipment. The analysis was conducted using Maine Uniform Building and Energy Code Amendments to the International Building Code 2009.

The proposed Verizon Wireless equipment will consist of one (2) COMMSCOPE-SBNHH-1D65A and related cables and hardware.

Base on the structural analysis performed for the aforementioned site (see attached document), it is our opinion that the proposed steel modification is adequate to resist the applicable loads (based on IBC 2009). It is assumed that the existing structure has been well maintained and is in good condition. In addition, it is assumed that all proposed equipment will be installed in accordance with manufacturers' specifications.

If you have any questions or need further assistance, please contact this office.

Sincerely Yours,

STATE OF MAINE
RONALD J. JACKSON
3773
REGISTERED PROFESSIONAL ENGINEER

Ronald J. Jackson

Ronald J, Jackson, P.E.
National Director of A&E Services
(774) 266-5050

NEXIUS

Accelerating Network and Business Transformation

Reviewed for Code Compliance
Inspections Division
Approved with Conditions
Date: 08/16/17

TABLE OF CONTENTS

		Sheet
1.	Project description	1
2.	Purpose and assumption	2
3.	Applicable codes and scope of calculation	2
4.	Design criteria & load generation	2
5.	Load Combination	3
6.	Sketch 1 – Isometric view of the model	4
7.	Sketch 3 – Render view of the model	5
8.	Sketch 4 – Structural shape of each member	6
9.	Sketch 5 – Wind load uplift	7
10.	Risa analysis	8 – 16
11.	Sketch 2 – Code Check	17

Reviewed for Code Compliance
Inspections Division
Approved with Conditions
Date: 08/16/17

SUBJECT : STRUCTURAL ANALYSIS
SITE NAME: Portland 8
NEXIUS PROJECT NO.

ORIGINATOR : JC
CHECKER :
DATE : 4/7/2017

The purpose of this calculation is to analyze the proposed steel modification steel frame on the roof top located on 44 Bedford Street, Portland ME 04101. This steel frame is mainly to support fiberglass panel (by others).

Preliminary assumptions used in the analysis

- The mount is built and installed in accordance with manufacturer's specifications.
- The analysis was performed for the steel framing subject to wind load only.

Applicable Codes:

- Maine Uniform Building and Energy Code (based on IBC 2009)
- ASCE 7-05 Minimum Design Loads for Buildings and Other Structures
- TIA 222 G Structural standard for antenna supporting structures and antennas
- AISC Steel Construction Manual (13th Ed.)

Scope of Calculation:

to design steel framing to support fiberglass panel

Design Criteria:

Basic Wind Velocity,	V = 99 MPH
Exposure category	B
Occupancy Category	II
Importance Factor	I = 1.0
Structure Height	h = 118.5' (AGL)

Wind load at vertical wall of enclosure

- Wind speed	V = 99 mph	(Ref. ASCE 7-05 Fig. 6-1)
- Velocity pressure exposure coefficient	Kz = 1.17	(Ref. ASCE 7-05 Table 6-3)
- Wind directionality factor	Kd = 0.85	(Ref. ASCE 7-05 Table 6-4)
- Topographic factor	Kzt = 1.0	(Ref. ASCE 7-05 Fig. 6-4)
- Gust Factor	G = 0.85	
- Importance Factor	I = 1.0	
- Force coefficient	Cf = 1.6	(Ref. ASCE 7-05 Fig. 6-22)

- Velocity pressure at mean roof height, qz

$$qz = 0.00256(kz)(Kzt)(Kd)V^2(I)$$ (Ref. ASCE 7-05 Eq. 27.3-1)

qz = 25 psf

- Design wind pressure

P = qz (G)(Cf)
P = (25)(0.85)(1.6)
P = 34 psf

Reviewed for Code Compliance
Inspections Division
Approved with Conditions
Date: 08/16/17

Load Combination

- LC 1 = 1.2D + 1.6W (Ref. ASCE 7-05 Section 2.3.2)
- LC 2 = 0.9D + 1.6W (Ref. ASCE 7-05 Section 2.3.2)

Calculation

See Risa 3D for structural analysis and unity check.

Conclusion

The steel framing is adequate to support new proposed steel modification.

Reviewed for Code Compliance
Inspection Division
Date: 08/16/17

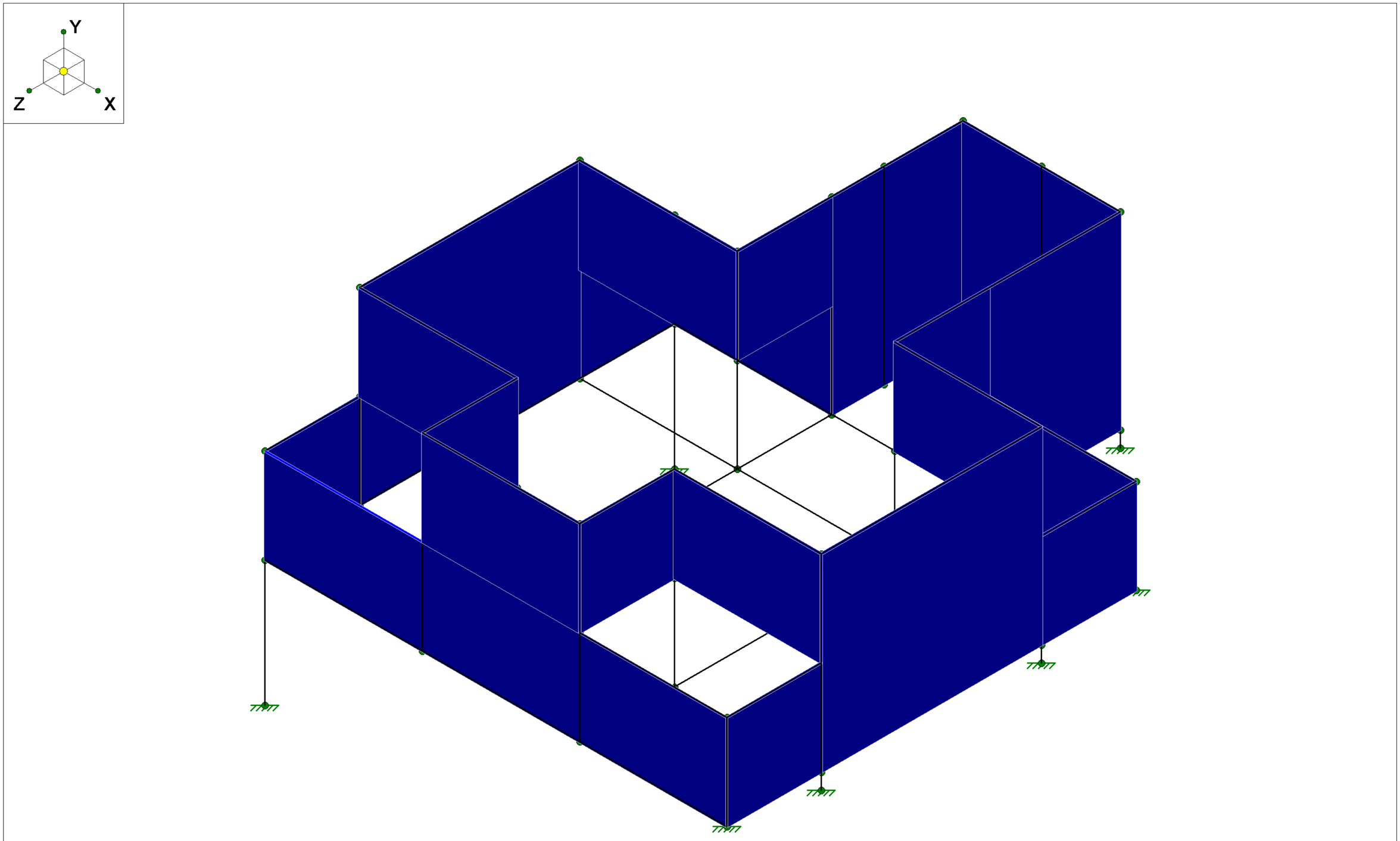

NEXIUS Inc.		SK - 1 3
JC	STEEL TOWER MOD	Apr 10, 2017 at 10:20 AM
	ISO VIEW	Tower Steel mod.r3d

Reviewed for Code Compliance
Inspector/Date
Approved
Date: 08/16/17

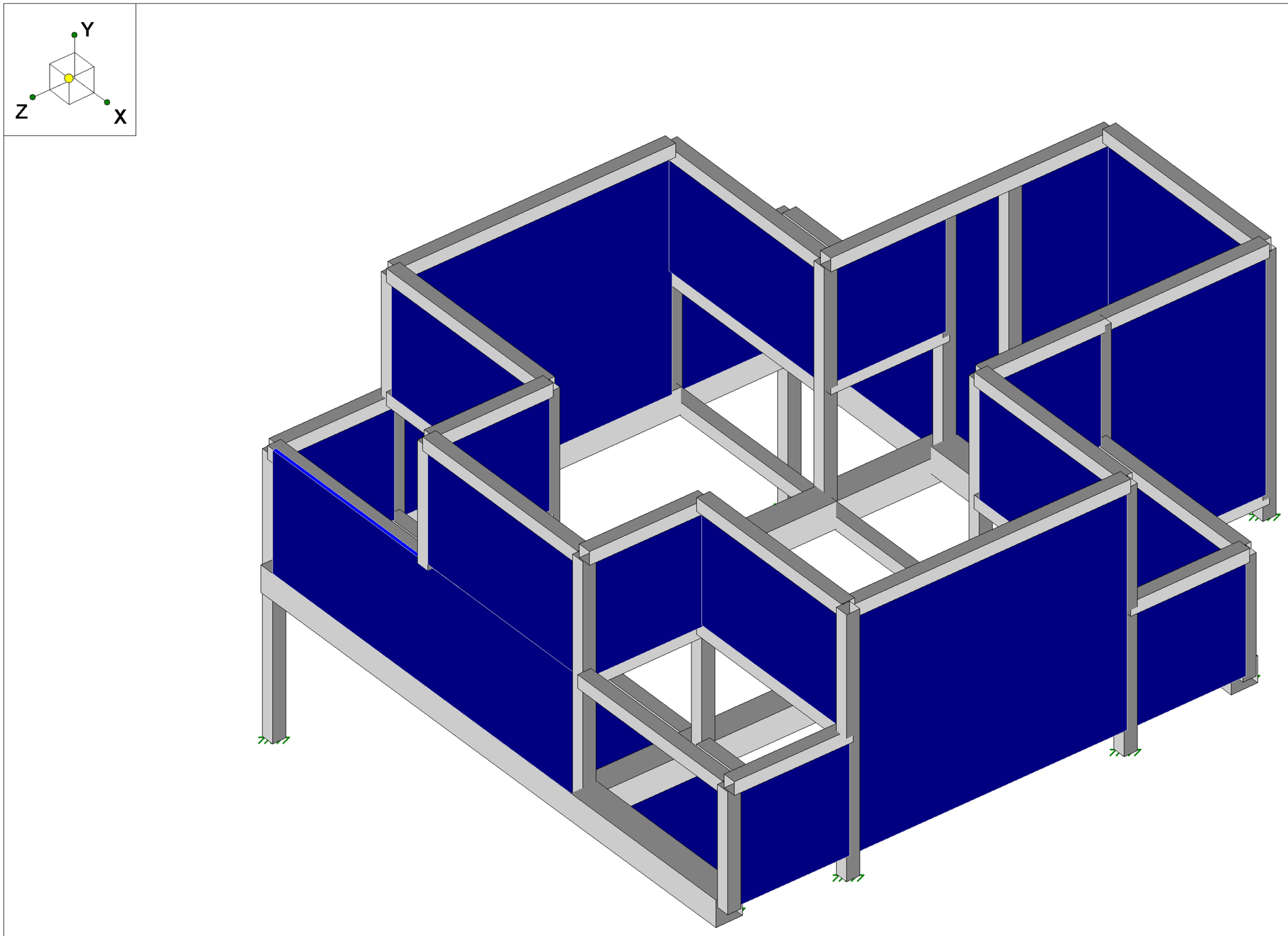

NEXIUS Inc.		SK - 3 7
JC	STEEL TOWER MOD	Apr 10, 2017 at 10:24 AM
	RENDER VIEW	Tower Steel mod.r3d

Reviewed for Code Compliance
Inspector Review
Date: 08/16/17

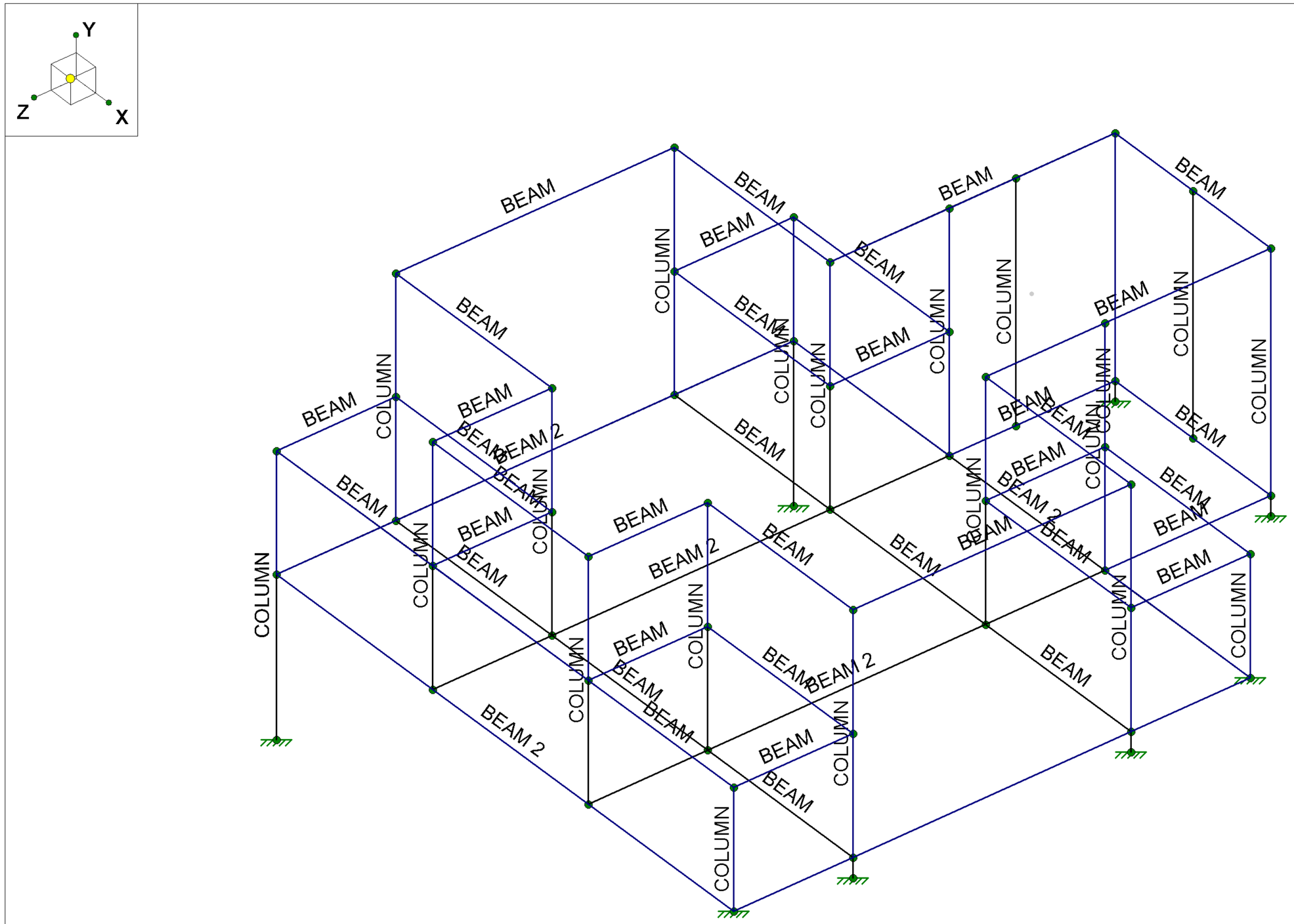

NEXIUS Inc.		SK - 4 8
JC	STEEL TOWER MOD	Apr 10, 2017 at 10:25 AM
	SECTION	Tower Steel mod.r3d

Reviewed for Code Compliance
Inspection Division
Date: 08/16/17

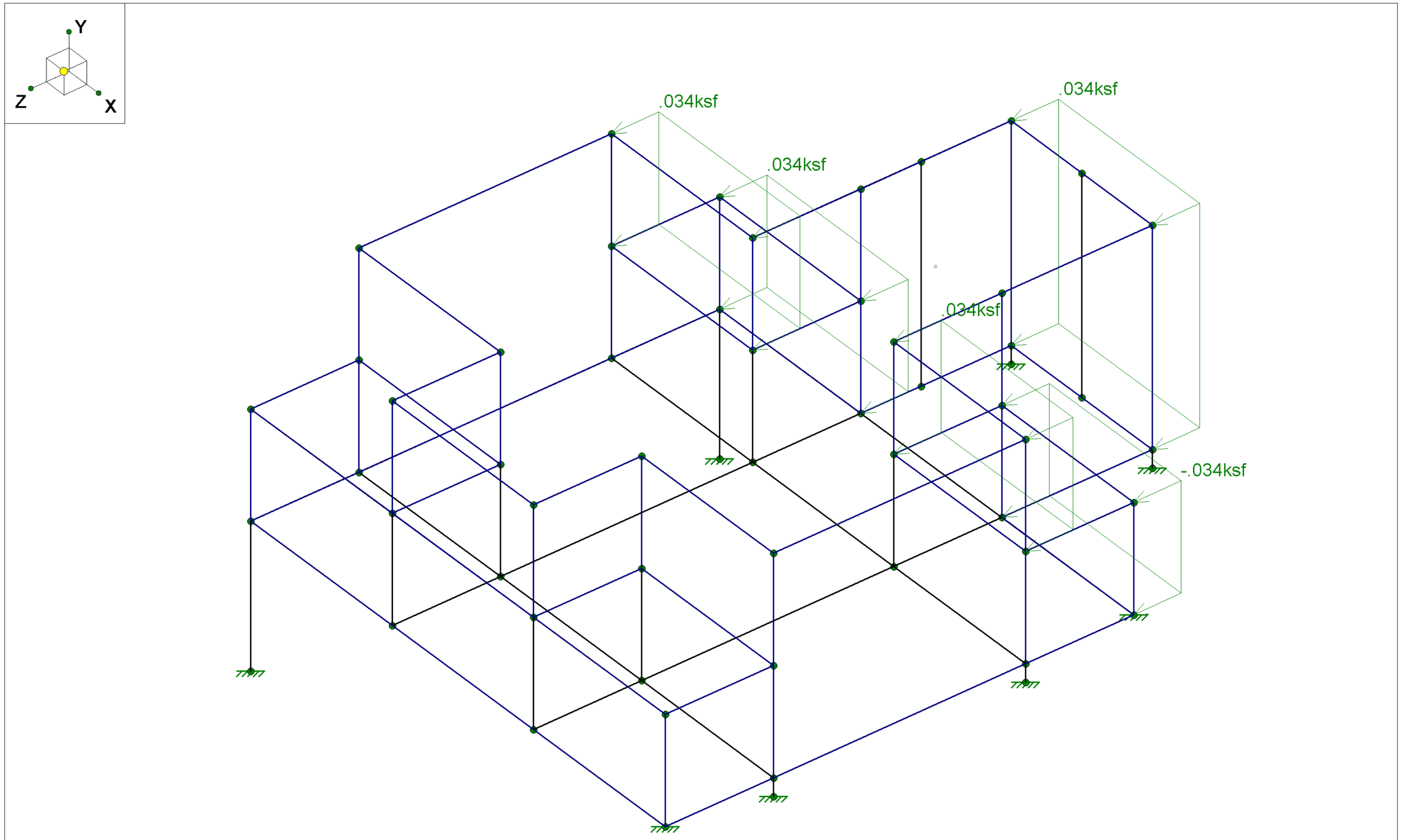

Loads: BLC 2, WIND LOAD

NEXIUS Inc.		SK - 5 9
JC	STEEL TOWER MOD	Apr 10, 2017 at 10:26 AM
	WIND LOAD	Tower Steel mod.r3d

Reviewed for Code Compliance
Inspections Division
Approved with Conditions
Date: 08/16/17

(Global) Model Settings

Display Sections for Member Calcs	5
Max Internal Sections for Member Calcs	97
Include Shear Deformation?	Yes
Increase Nailing Capacity for Wind?	Yes
Include Warping?	Yes
Trans Load Btwn Intersecting Wood Wall?	Yes
Area Load Mesh (in^2)	144
Merge Tolerance (in)	.12
P-Delta Analysis Tolerance	0.50%
Include P-Delta for Walls?	Yes
Automatically Iterate Stiffness for Walls?	Yes
Max Iterations for Wall Stiffness	3
Gravity Acceleration (ft/sec^2)	32.2
Wall Mesh Size (in)	24
Eigensolution Convergence Tol. (1.E-)	4
Vertical Axis	Y
Global Member Orientation Plane	XZ
Static Solver	Sparse Accelerated
Dynamic Solver	Accelerated Solver

Hot Rolled Steel Code	AISC 13th(360-05): LRFD
Adjust Stiffness?	Yes(Iterative)
RISAConnection Code	None
Cold Formed Steel Code	None
Wood Code	None
Wood Temperature	< 100F
Concrete Code	None
Masonry Code	None
Aluminum Code	None - Building

Number of Shear Regions	4
Region Spacing Increment (in)	4
Biaxial Column Method	Exact Integration
Parme Beta Factor (PCA)	.65
Concrete Stress Block	Rectangular
Use Cracked Sections?	Yes
Use Cracked Sections Slab?	Yes
Bad Framing Warnings?	No
Unused Force Warnings?	Yes
Min 1 Bar Diam. Spacing?	No
Concrete Rebar Set	REBAR_SET_ASTMA615
Min % Steel for Column	1
Max % Steel for Column	8

Reviewed for Code Compliance
Inspections Division
Approved with Conditions
Date: 08/16/17

(Global) Model Settings, Continued

Seismic Code	None
Seismic Base Elevation (ft)	Not Entered
Add Base Weight?	Yes
Ct X	.02
Ct Z	.02
T X (sec)	Not Entered
T Z (sec)	Not Entered
R X	3
R Z	3

Hot Rolled Steel Properties

	Label	E [ksi]	G [ksi]	Nu	Therm (\1E ...	Density[k/ft...	Yield[ksi]	Ry	Fu[ksi]	Rt
1	A992	29000	11154	.3	.65	.49	50	1.1	65	1.1
2	A36 Gr.36	29000	11154	.3	.65	.49	36	1.5	58	1.2
3	A572 Gr.50	29000	11154	.3	.65	.49	50	1.1	65	1.1
4	A500 Gr.B RND	29000	11154	.3	.65	.527	42	1.4	58	1.3
5	A500 Gr.B Rect	29000	11154	.3	.65	.527	46	1.4	58	1.3
6	A53 Gr.B	29000	11154	.3	.65	.49	35	1.6	60	1.2
7	A1085	29000	11154	.3	.65	.49	50	1.4	65	1.3

General Material Properties

	Label	E [ksi]	G [ksi]	Nu	Therm (\1E 5 F)	Density[k/ft^3]
1	FRP PANEL	1e+6	1e+6	.15	.6	.145
2	gen_Conc4NW	3644	1584	.15	.6	.145
3	gen_Conc3LW	2085	906	.15	.6	.11
4	gen_Conc4LW	2408	1047	.15	.6	.11
5	gen_Alum	10100	4077	.3	1.29	.173
6	gen_Steel	29000	11154	.3	.65	.49
7	gen_Plywood	1800	38	0	.3	.035
8	RIGID	1e+6		.3	0	.103

Hot Rolled Steel Section Sets

	Label	Shape	Type	Design List	Material	Design Rul...	A [in2]	Iyy [in4]	Izz [in4]	J [in4]
1	BEAM	HSS4x4x4	Beam	SquareTube	A500 Gr.B RND	Typical	3.37	7.8	7.8	12.8
2	BEAM 2	HSS8x8x4	Beam	SquareTube	A500 Gr.B RND	Typical	7.1	70.7	70.7	111
3	COLUMN	HSS4x4x4	Column	SquareTube	A500 Gr.B RND	Typical	3.37	7.8	7.8	12.8

Joint Coordinates and Temperatures

	Label	X [ft]	Y [ft]	Z [ft]	Temp [F]	Detach From Diap...
1	N1	0	0	4.1667	0	
2	N2	0	0	17.1667	0	
3	N3	5	4	0	0	
4	N4	10	4	0	0	
5	N5	0	4	4.1667	0	
6	N6	5	4	4.1667	0	
7	N7	10	4	4.1667	0	
8	N8	14.667	4	4.1667	0	

Reviewed for Code Compliance
Inspections Division
Approved with Conditions
Date: 08/16/17

Joint Coordinates and Temperatures (Continued)

	Label	X [ft]	Y [ft]	Z [ft]	Temp [F]	Detach From Diap...
9	N9	0	4	7.1667	0	
10	N10	5	4	7.1667	0	
11	N11	10	4	7.1667	0	
12	N12	14.667	4	7.1667	0	
13	N13	0	4	14.1667	0	
14	N14	5	4	14.1667	0	
15	N15	10	4	14.1667	0	
16	N16	14.667	4	14.1667	0	
17	N17	0	4	17.1667	0	
18	N18	5	4	17.1667	0	
19	N19	10	4	17.1667	0	
20	N20	14.667	4	17.1667	0	
21	N21	0	7	4.1667	0	
22	N22	5	7	4.1667	0	
23	N23	10	7	4.1667	0	
24	N24	14.667	7	4.1667	0	
25	N25	0	7	7.1667	0	
26	N26	5	7	7.1667	0	
27	N27	10	7	7.1667	0	
28	N28	14.667	7	7.1667	0	
29	N29	0	7	14.1667	0	
30	N30	5	7	14.1667	0	
31	N31	10	7	14.1667	0	
32	N32	14.667	7	14.1667	0	
33	N33	0	7	17.1667	0	
34	N34	5	7	17.1667	0	
35	N35	10	7	17.1667	0	
36	N36	14.667	7	17.1667	0	
37	N37	5	10	0	0	
38	N38	10	10	0	0	
39	N39	5	10	4.1667	0	
40	N40	10	10	4.1667	0	
41	N41	0	10	7.1667	0	
42	N42	5	10	7.1667	0	
43	N43	10	10	7.1667	0	
44	N44	14.667	10	7.1667	0	
45	N45	0	10	14.1667	0	
46	N46	5	10	14.1667	0	
47	N47	10	10	14.1667	0	
48	N48	14.667	10	14.1667	0	
49	N49	5	10	17.1667	0	
50	N50	10	10	17.1667	0	
51	N51	14.667	3.5	14.1667	0	
52	N52	14.667	3.5	7.1667	0	
53	N53	5	3.5	0	0	
54	N54	10	3.5	0	0	
55	N55	5	4	2.5	0	
56	N56	7.5	4	0	0	
57	N57	5	10	2.5	0	
58	N58	7.5	10	0	0	

RESURGAM CITY OF PORTLAND, MAINE
Reviewed for Code Compliance
Inspections Division
Approved with Conditions
Date: 08/16/17

Joint Boundary Conditions

	Joint Label	X [k/in]	Y [k/in]	Z [k/in]	X Rot.[k-ft/rad]	Y Rot.[k-ft/rad]	Z Rot.[k-ft/rad]
1	N2	Reaction	Reaction	Reaction	Reaction	Reaction	Reaction
2	N1	Reaction	Reaction	Reaction	Reaction	Reaction	Reaction
3	N51	Reaction	Reaction	Reaction	Reaction	Reaction	Reaction
4	N52	Reaction	Reaction	Reaction	Reaction	Reaction	Reaction
5	N54	Reaction	Reaction	Reaction	Reaction	Reaction	Reaction
6	N53	Reaction	Reaction	Reaction	Reaction	Reaction	Reaction
7	N8	Reaction	Reaction	Reaction	Reaction	Reaction	Reaction
8	N20	Reaction	Reaction	Reaction	Reaction	Reaction	Reaction

Member Primary Data

	Label	I Joint	J Joint	K Joint	Rotate(deg)	Section/Shape	Type	Design List	Material	Design Rules
1	M1	N1	N21			COLUMN	Column	SquareTube	A500 Gr....	Typical
2	M2	N2	N33			COLUMN	Column	SquareTube	A500 Gr....	Typical
3	M3	N5	N8			BEAM 2	Beam	SquareTube	A500 Gr....	Typical
4	M4	N17	N20			BEAM 2	Beam	SquareTube	A500 Gr....	Typical
5	M6	N19	N7			BEAM 2	Beam	SquareTube	A500 Gr....	Typical
6	M8	N17	N5			BEAM 2	Beam	SquareTube	A500 Gr....	Typical
7	M9	N9	N10			BEAM	Beam	SquareTube	A500 Gr....	Typical
8	M10	N10	N11			BEAM	Beam	SquareTube	A500 Gr....	Typical
9	M11	N11	N12			BEAM	Beam	SquareTube	A500 Gr....	Typical
10	M12	N13	N14			BEAM	Beam	SquareTube	A500 Gr....	Typical
11	M13	N14	N15			BEAM	Beam	SquareTube	A500 Gr....	Typical
12	M14	N15	N16			BEAM	Beam	SquareTube	A500 Gr....	Typical
13	M15	N3	N6			BEAM	Beam	SquareTube	A500 Gr....	Typical
14	M16	N4	N7			BEAM	Beam	SquareTube	A500 Gr....	Typical
15	M16A	N18	N6			BEAM 2	Beam	SquareTube	A500 Gr....	Typical
16	M18	N6	N39			COLUMN	Column	SquareTube	A500 Gr....	Typical
17	M19	N7	N40			COLUMN	Column	SquareTube	A500 Gr....	Typical
18	M20	N8	N24			COLUMN	Column	SquareTube	A500 Gr....	Typical
19	M21	N9	N41			COLUMN	Column	SquareTube	A500 Gr....	Typical
20	M22	N10	N42			COLUMN	Column	SquareTube	A500 Gr....	Typical
21	M23	N11	N43			COLUMN	Column	SquareTube	A500 Gr....	Typical
22	M24	N52	N44			COLUMN	Column	SquareTube	A500 Gr....	Typical
23	M25	N13	N45			COLUMN	Column	SquareTube	A500 Gr....	Typical
24	M26	N14	N46			COLUMN	Column	SquareTube	A500 Gr....	Typical
25	M27	N15	N47			COLUMN	Column	SquareTube	A500 Gr....	Typical
26	M28	N51	N48			COLUMN	Column	SquareTube	A500 Gr....	Typical
27	M30	N18	N49			COLUMN	Column	SquareTube	A500 Gr....	Typical
28	M31	N19	N50			COLUMN	Column	SquareTube	A500 Gr....	Typical
29	M32	N20	N36			COLUMN	Column	SquareTube	A500 Gr....	Typical
30	M33	N21	N22			BEAM	Beam	SquareTube	A500 Gr....	Typical
31	M34	N23	N24			BEAM	Beam	SquareTube	A500 Gr....	Typical
32	M35	N25	N26			BEAM	Beam	SquareTube	A500 Gr....	Typical
33	M36	N27	N28			BEAM	Beam	SquareTube	A500 Gr....	Typical
34	M37	N29	N30			BEAM	Beam	SquareTube	A500 Gr....	Typical
35	M38	N31	N32			BEAM	Beam	SquareTube	A500 Gr....	Typical
36	M39	N33	N34			BEAM	Beam	SquareTube	A500 Gr....	Typical
37	M40	N35	N36			BEAM	Beam	SquareTube	A500 Gr....	Typical
38	M41	N21	N25			BEAM	Beam	SquareTube	A500 Gr....	Typical

Reviewed for Code Compliance
Inspections Division
Approved with Conditions
Date: 08/16/17

Member Primary Data (Continued)

	Label	I Joint	J Joint	K Joint	Rotate(deg)	Section/Shape	Type	Design List	Material	Design Rules
39	M42	N22	N26			BEAM	Beam	SquareTube	A500 Gr....	Typical
40	M43	N23	N27			BEAM	Beam	SquareTube	A500 Gr....	Typical
41	M44	N24	N28			BEAM	Beam	SquareTube	A500 Gr....	Typical
42	M45	N29	N33			BEAM	Beam	SquareTube	A500 Gr....	Typical
43	M46	N30	N34			BEAM	Beam	SquareTube	A500 Gr....	Typical
44	M47	N31	N35			BEAM	Beam	SquareTube	A500 Gr....	Typical
45	M48	N32	N36			BEAM	Beam	SquareTube	A500 Gr....	Typical
46	M49	N53	N3			COLUMN	Column	SquareTube	A500 Gr....	Typical
47	M50	N54	N38			COLUMN	Column	SquareTube	A500 Gr....	Typical
48	M63	N37	N42			BEAM	Beam	SquareTube	A500 Gr....	Typical
49	M64	N38	N43			BEAM	Beam	SquareTube	A500 Gr....	Typical
50	M65	N41	N42			BEAM	Beam	SquareTube	A500 Gr....	Typical
51	M66	N43	N44			BEAM	Beam	SquareTube	A500 Gr....	Typical
52	M67	N45	N46			BEAM	Beam	SquareTube	A500 Gr....	Typical
53	M68	N47	N48			BEAM	Beam	SquareTube	A500 Gr....	Typical
54	M69	N49	N50			BEAM	Beam	SquareTube	A500 Gr....	Typical
55	M70	N41	N45			BEAM	Beam	SquareTube	A500 Gr....	Typical
56	M71	N44	N48			BEAM	Beam	SquareTube	A500 Gr....	Typical
57	M72	N47	N50			BEAM	Beam	SquareTube	A500 Gr....	Typical
58	M73	N46	N49			BEAM	Beam	SquareTube	A500 Gr....	Typical
59	M74	N38	N37			BEAM	Beam	SquareTube	A500 Gr....	Typical
60	M60	N4	N3			BEAM	Beam	SquareTube	A500 Gr....	Typical
61	M61	N55	N57			COLUMN	Column	SquareTube	A500 Gr....	Typical
62	M62	N56	N58			COLUMN	Column	SquareTube	A500 Gr....	Typical

Member Advanced Data

	Label	I Release	J Release	I Offset[in]	J Offset[in]	T/C Only	Physical	Analysis ...	Inactive	Seismic Design ...
1	M1						Yes			None
2	M2						Yes			None
3	M3						Yes			None
4	M4						Yes			None
5	M6						Yes			None
6	M8						Yes			None
7	M9						Yes			None
8	M10						Yes			None
9	M11						Yes			None
10	M12						Yes			None
11	M13						Yes			None
12	M14						Yes			None
13	M15						Yes			None
14	M16						Yes			None
15	M16A						Yes			None
16	M18						Yes			None
17	M19						Yes			None
18	M20						Yes			None
19	M21						Yes			None
20	M22						Yes			None
21	M23						Yes			None
22	M24						Yes			None
23	M25						Yes			None

CITY OF PORTLAND, MAINE RESURGAM
Reviewed for Code Compliance
Inspections Division
Approved with Conditions
Date: 08/16/17

Member Advanced Data (Continued)

	Label	I Release	J Release	I Offset[in]	J Offset[in]	T/C Only	Physical	Analysis ...	Inactive	Seismic Design ...
24	M26						Yes			None
25	M27						Yes			None
26	M28						Yes			None
27	M30						Yes			None
28	M31						Yes			None
29	M32						Yes			None
30	M33						Yes			None
31	M34						Yes			None
32	M35						Yes			None
33	M36						Yes			None
34	M37						Yes			None
35	M38						Yes			None
36	M39						Yes			None
37	M40						Yes			None
38	M41						Yes			None
39	M42						Yes			None
40	M43						Yes			None
41	M44						Yes			None
42	M45						Yes			None
43	M46						Yes			None
44	M47						Yes			None
45	M48						Yes			None
46	M49						Yes			None
47	M50						Yes			None
48	M63						Yes			None
49	M64						Yes			None
50	M65						Yes			None
51	M66						Yes			None
52	M67						Yes			None
53	M68						Yes			None
54	M69						Yes			None
55	M70						Yes			None
56	M71						Yes			None
57	M72						Yes			None
58	M73						Yes			None
59	M74						Yes			None
60	M60						Yes			None
61	M61						Yes			None
62	M62						Yes			None

Hot Rolled Steel Design Parameters

	Label	Shape	Length[ft]	Lbyy[ft]	Lbzz[ft]	Lcomp top[ft]	Lcomp bot[ft]	L-torq...	Kyy	Kzz	Cb	Functi...
1	M1	COLUMN	7									Lateral
2	M2	COLUMN	7									Lateral
3	M3	BEAM 2	14.667			Lbyy						Lateral
4	M4	BEAM 2	14.667			Lbyy						Lateral
5	M6	BEAM 2	13			Lbyy						Lateral
6	M8	BEAM 2	13			Lbyy						Lateral
7	M9	BEAM	5			Lbyy						Lateral
8	M10	BEAM	5			Lbyy						Lateral

Reviewed for Code Compliance
Inspections Division
Approved with Conditions
Date: 08/16/17

Hot Rolled Steel Design Parameters (Continued)

	Label	Shape	Length[ft]	Lbyy[ft]	Lbzz[ft]	Lcomp top[ft]	Lcomp bot[ft]	L-torq...	Kyy	Kzz	Cb	Functi...
9	M11	BEAM	4.667			Lbyy						Lateral
10	M12	BEAM	5			Lbyy						Lateral
11	M13	BEAM	5			Lbyy						Lateral
12	M14	BEAM	4.667			Lbyy						Lateral
13	M15	BEAM	4.167			Lbyy						Lateral
14	M16	BEAM	4.167			Lbyy						Lateral
15	M16A	BEAM 2	13			Lbyy						Lateral
16	M18	COLUMN	6									Lateral
17	M19	COLUMN	6									Lateral
18	M20	COLUMN	3									Lateral
19	M21	COLUMN	6									Lateral
20	M22	COLUMN	6									Lateral
21	M23	COLUMN	6									Lateral
22	M24	COLUMN	6.5									Lateral
23	M25	COLUMN	6									Lateral
24	M26	COLUMN	6									Lateral
25	M27	COLUMN	6									Lateral
26	M28	COLUMN	6.5									Lateral
27	M30	COLUMN	6									Lateral
28	M31	COLUMN	6									Lateral
29	M32	COLUMN	3									Lateral
30	M33	BEAM	5			Lbyy						Lateral
31	M34	BEAM	4.667			Lbyy						Lateral
32	M35	BEAM	5			Lbyy						Lateral
33	M36	BEAM	4.667			Lbyy						Lateral
34	M37	BEAM	5			Lbyy						Lateral
35	M38	BEAM	4.667			Lbyy						Lateral
36	M39	BEAM	5			Lbyy						Lateral
37	M40	BEAM	4.667			Lbyy						Lateral
38	M41	BEAM	3			Lbyy						Lateral
39	M42	BEAM	3			Lbyy						Lateral
40	M43	BEAM	3			Lbyy						Lateral
41	M44	BEAM	3			Lbyy						Lateral
42	M45	BEAM	3			Lbyy						Lateral
43	M46	BEAM	3			Lbyy						Lateral
44	M47	BEAM	3			Lbyy						Lateral
45	M48	BEAM	3			Lbyy						Lateral
46	M49	COLUMN	.5									Lateral
47	M50	COLUMN	6.5									Lateral
48	M63	BEAM	7.167			Lbyy						Lateral
49	M64	BEAM	7.167			Lbyy						Lateral
50	M65	BEAM	5			Lbyy						Lateral
51	M66	BEAM	4.667			Lbyy						Lateral
52	M67	BEAM	5			Lbyy						Lateral
53	M68	BEAM	4.667			Lbyy						Lateral
54	M69	BEAM	5			Lbyy						Lateral
55	M70	BEAM	7			Lbyy						Lateral
56	M71	BEAM	7			Lbyy						Lateral
57	M72	BEAM	3			Lbyy						Lateral
58	M73	BEAM	3			Lbyy						Lateral
59	M74	BEAM	5			Lbyy						Lateral
60	M60	BEAM	5			Lbyy						Lateral

CITY OF PORTLAND, MAINE
Reviewed for Code Compliance
Inspections Division
Approved with Conditions
Date: 08/16/17

Hot Rolled Steel Design Parameters (Continued)

	Label	Shape	Length[ft]	Lbyy[ft]	Lbzz[ft]	Lcomp top[ft]	Lcomp bot[ft]	L-torq...	Kyy	Kzz	Cb	Functi...
61	M61	COLUMN	6									Lateral
62	M62	COLUMN	6									Lateral

Basic Load Cases

	BLC Description	Category	X Gravity	Y Gravity	Z Gravity	Joint	Point	Distribut...	Area(Member)	Surface(Plate/Wa...
1	SELFWEIGHT	DL		-1						
2	WIND LOAD	WL								5

Load Combinations

	Description	Sol...	PD...	SR...	BLC	Fact...	BLC	Fact...	BLC	Fact...	BLC	Fact...	BLC	Fact...	BLC	Fact...	BLC	Fact...	BLC	Fact...	BLC	Fact...	BLC	Fact...
1	LC 1	Yes	Y		DL	1.2	WL	1.6																
2	LC 2	Yes	Y		DL	.9	WL	1.6																

Envelope Joint Reactions

	Joint		X [k]	LC	Y [k]	LC	Z [k]	LC	MX [k-ft]	LC	MY [k-ft]	LC	MZ [k-ft]	LC
1	N2	max	.02	1	2.794	1	-.106	2	-.176	2	-.008	2	-.02	2
2		min	.015	2	2.143	2	-.122	1	-.199	1	-.009	1	-.027	1
3	N1	max	.045	1	2.011	1	.01	1	-.028	1	-.013	2	-.048	2
4		min	.038	2	1.557	2	.001	2	-.037	2	-.014	1	-.057	1
5	N51	max	-.383	2	3.003	1	-.032	2	.002	1	.012	1	.036	1
6		min	-.451	1	2.391	2	-.038	1	.001	2	.01	2	.033	2
7	N52	max	-.486	2	.838	1	.018	1	-.004	2	-.01	2	.024	2
8		min	-.597	1	.722	2	.014	2	-.005	1	-.012	1	.022	1
9	N54	max	1.054	1	.561	1	-.378	1	-.356	2	-.006	2	-.301	2
10		min	.995	2	.28	2	-.496	2	-.364	1	-.009	1	-.321	1
11	N53	max	1.112	1	1.741	1	-1.047	1	-.624	2	-.019	1	-.297	2
12		min	1.044	2	1.213	2	-1.158	2	-.648	1	-.021	2	-.316	1
13	N8	max	-.955	1	-.085	1	-2.024	2	-.217	2	-2.626	1	-1.819	2
14		min	-1.001	2	-.191	2	-2.105	1	-.237	1	-2.636	2	-2.166	1
15	N20	max	-.223	2	1.327	1	-.988	2	.422	1	-.875	1	-1.111	2
16		min	-.228	1	1.028	2	-1.126	1	.343	2	-.901	2	-1.458	1
17	Totals:	max	0	1	12.191	1	-4.787	1						
18		min	0	2	9.143	2	-4.787	2						

Envelope AISC 13th(360-05): LRFD Steel Code Checks

	Member	Shape	Code Check	Loc[ft]	LC	Shear...	Loc[ft]	Dir	LC	phi*Pn...	phi*Pnt...	phi*Mn...	phi*Mn...	Cb	Eqn
1	M1	HSS4x4x4	.022	3.938	1	.002	0	y	1	105.634	127.386	14.774	14.774	1...	H1-1b
2	M2	HSS4x4x4	.036	3.938	1	.004	0	z	1	105.634	127.386	14.774	14.774	1...	H1-1b
3	M3	HSS8x8x4	.016	14.6...	1	.008	14.6...	y	1	221.703	268.38	62.287	62.287	2...	H1-1b
4	M4	HSS8x8x4	.028	14.6...	1	.011	0	y	1	221.703	268.38	62.287	62.287	2...	H1-1b
5	M6	HSS8x8x4	.007	9.885	1	.005	2.979	y	1	230.973	268.38	62.287	62.287	1...	H1-1b
6	M8	HSS8x8x4	.009	5.958	1	.003	0	y	1	230.973	268.38	62.287	62.287	1...	H1-1b
7	M9	HSS4x4x4	.008	0	1	.002	0	y	1	115.78	127.386	14.774	14.774	1...	H1-1b
8	M10	HSS4x4x4	.006	1.563	1	.002	5	y	1	115.78	127.386	14.774	14.774	1...	H1-1b
9	M11	HSS4x4x4	.016	4.667	1	.004	4.667	y	1	117.213	127.386	14.774	14.774	2...	H1-1b
10	M12	HSS4x4x4	.008	5	1	.003	5	y	1	115.78	127.386	14.774	14.774	3	H1-1b

Reviewed for Code Compliance
Inspections Division
Approved with Conditions
Date: 08/16/17

Envelope AISC 13th(360-05): LRFD Steel Code Checks (Continued)

	Member	Shape	Code Check	Loc[ft]	LC	Shear...	Loc[ft]	Dir	LC	phi*Pn...	phi*Pnt...	phi*Mn...	phi*Mn...	Cb	Eqn
11	M13	HSS4x4x4	.005	3.073	1	.001	0	y	1	115.78	127.386	14.774	14.774	1...	H1-1b
12	M14	HSS4x4x4	.015	4.667	1	.003	4.667	y	1	117.213	127.386	14.774	14.774	2...	H1-1b
13	M15	HSS4x4x4	.008	4.167	1	.005	4.167	y	1	119.209	127.386	14.774	14.774	3	H1-1b
14	M16	HSS4x4x4	.002	0	1	.002	0	y	1	119.209	127.386	14.774	14.774	3	H1-1b
15	M16A	HSS8x8x4	.011	13	1	.006	2.979	y	1	230.973	268.38	62.287	62.287	1...	H1-1b
16	M18	HSS4x4x4	.022	3	1	.006	3	z	1	111.014	127.386	14.774	14.774	1...	H1-1b
17	M19	HSS4x4x4	.003	3	2	.008	3	y	1	111.014	127.386	14.774	14.774	1...	H1-1b
18	M20	HSS4x4x4	.006	0	1	.002	0	y	1	123.08	127.386	14.774	14.774	1...	H1-1b
19	M21	HSS4x4x4	.028	3	1	.011	3	z	1	111.014	127.386	14.774	14.774	1...	H1-1b
20	M22	HSS4x4x4	.024	0	1	.008	3	z	1	111.014	127.386	14.774	14.774	2...	H1-1b
21	M23	HSS4x4x4	.018	3	1	.007	3	y	1	111.014	127.386	14.774	14.774	1...	H1-1b
22	M24	HSS4x4x4	.022	.474	1	.018	0	y	1	108.394	127.386	14.774	14.774	3	H1-1b
23	M25	HSS4x4x4	.032	3	1	.010	3	z	1	111.014	127.386	14.774	14.774	1...	H1-1b
24	M26	HSS4x4x4	.011	3	1	.003	0	y	1	111.014	127.386	14.774	14.774	2...	H1-1b
25	M27	HSS4x4x4	.023	3	1	.008	3	y	1	111.014	127.386	14.774	14.774	1...	H1-1b
26	M28	HSS4x4x4	.028	0	1	.014	0	y	1	108.394	127.386	14.774	14.774	3	H1-1b*
27	M30	HSS4x4x4	.016	0	1	.006	3	y	1	111.014	127.386	14.774	14.774	2...	H1-1b
28	M31	HSS4x4x4	.021	0	1	.007	3	y	1	111.014	127.386	14.774	14.774	2...	H1-1b
29	M32	HSS4x4x4	.001	0	1	.001	0	y	1	123.08	127.386	14.774	14.774	1...	H1-1b
30	M33	HSS4x4x4	.004	0	1	.003	0	y	1	115.78	127.386	14.774	14.774	1...	H1-1b
31	M34	HSS4x4x4	.005	4.229	1	.004	0	y	1	117.213	127.386	14.774	14.774	1...	H1-1b
32	M35	HSS4x4x4	.002	5	1	.004	5	y	1	115.78	127.386	14.774	14.774	2...	H1-1b
33	M36	HSS4x4x4	.016	4.667	1	.005	4.667	y	1	117.213	127.386	14.774	14.774	2...	H1-1b
34	M37	HSS4x4x4	.004	0	1	.002	0	y	1	115.78	127.386	14.774	14.774	2...	H1-1b
35	M38	HSS4x4x4	.014	4.667	1	.003	4.667	y	1	117.213	127.386	14.774	14.774	2...	H1-1b
36	M39	HSS4x4x4	.029	0	1	.007	0	y	1	115.78	127.386	14.774	14.774	2...	H1-1b
37	M40	HSS4x4x4	.022	4.667	1	.005	4.667	y	1	117.213	127.386	14.774	14.774	2...	H1-1b
38	M41	HSS4x4x4	.026	3	1	.007	0	y	1	123.08	127.386	14.774	14.774	2...	H1-1b
39	M42	HSS4x4x4	.013	0	1	.005	3	y	1	123.08	127.386	14.774	14.774	2...	H1-1b
40	M43	HSS4x4x4	.002	3	2	.002	3	y	1	123.08	127.386	14.774	14.774	1...	H1-1b
41	M44	HSS4x4x4	.002	0	1	.006	0	y	1	123.08	127.386	14.774	14.774	1...	H1-1b
42	M45	HSS4x4x4	.030	0	1	.009	3	y	1	123.08	127.386	14.774	14.774	2...	H1-1b
43	M46	HSS4x4x4	.003	1.25	1	.002	3	y	1	123.08	127.386	14.774	14.774	1...	H1-1b
44	M47	HSS4x4x4	.001	0	1	.004	0	y	1	123.08	127.386	14.774	14.774	1...	H1-1b
45	M48	HSS4x4x4	.003	.625	1	.002	3	y	1	123.08	127.386	14.774	14.774	1...	H1-1b
46	M49	HSS4x4x4	.072	0	1	.035	0	z	2	127.264	127.386	14.774	14.774	2...	H1-1b
47	M50	HSS4x4x4	.049	0	1	.031	0	y	1	108.394	127.386	14.774	14.774	3	H1-1b
48	M63	HSS4x4x4	.007	4.181	1	.003	0	y	1	104.685	127.386	14.774	14.774	1...	H1-1b
49	M64	HSS4x4x4	.012	4.181	1	.004	4.181	y	1	104.685	127.386	14.774	14.774	2...	H1-1b
50	M65	HSS4x4x4	.004	0	1	.005	0	y	1	115.78	127.386	14.774	14.774	2...	H1-1b
51	M66	HSS4x4x4	.004	4.667	1	.003	4.667	y	1	117.213	127.386	14.774	14.774	3	H1-1b
52	M67	HSS4x4x4	.004	5	1	.004	5	y	1	115.78	127.386	14.774	14.774	2...	H1-1b
53	M68	HSS4x4x4	.007	4.667	1	.001	4.667	y	1	117.213	127.386	14.774	14.774	3	H1-1b
54	M69	HSS4x4x4	.007	0	1	.001	0	y	1	115.78	127.386	14.774	14.774	3	H1-1b
55	M70	HSS4x4x4	.013	7	1	.002	7	y	1	105.634	127.386	14.774	14.774	2...	H1-1b
56	M71	HSS4x4x4	.007	7	1	.002	7	y	1	105.634	127.386	14.774	14.774	2...	H1-1b
57	M72	HSS4x4x4	.001	3	1	.005	3	y	1	123.08	127.386	14.774	14.774	3	H1-1b
58	M73	HSS4x4x4	.004	0	1	.002	0	y	1	123.08	127.386	14.774	14.774	2...	H1-1b
59	M74	HSS4x4x4	.010	0	1	.002	5	y	1	115.78	127.386	14.774	14.774	2...	H1-1b
60	M60	HSS4x4x4	.005	5	1	.003	5	y	1	115.78	127.386	14.774	14.774	2...	H1-1b
61	M61	HSS4x4x4	.001	0	1	.002	0	z	1	111.014	127.386	14.774	14.774	1...	H1-1b
62	M62	HSS4x4x4	.001	6	1	.001	0	z	1	111.014	127.386	14.774	14.774	1...	H1-1b

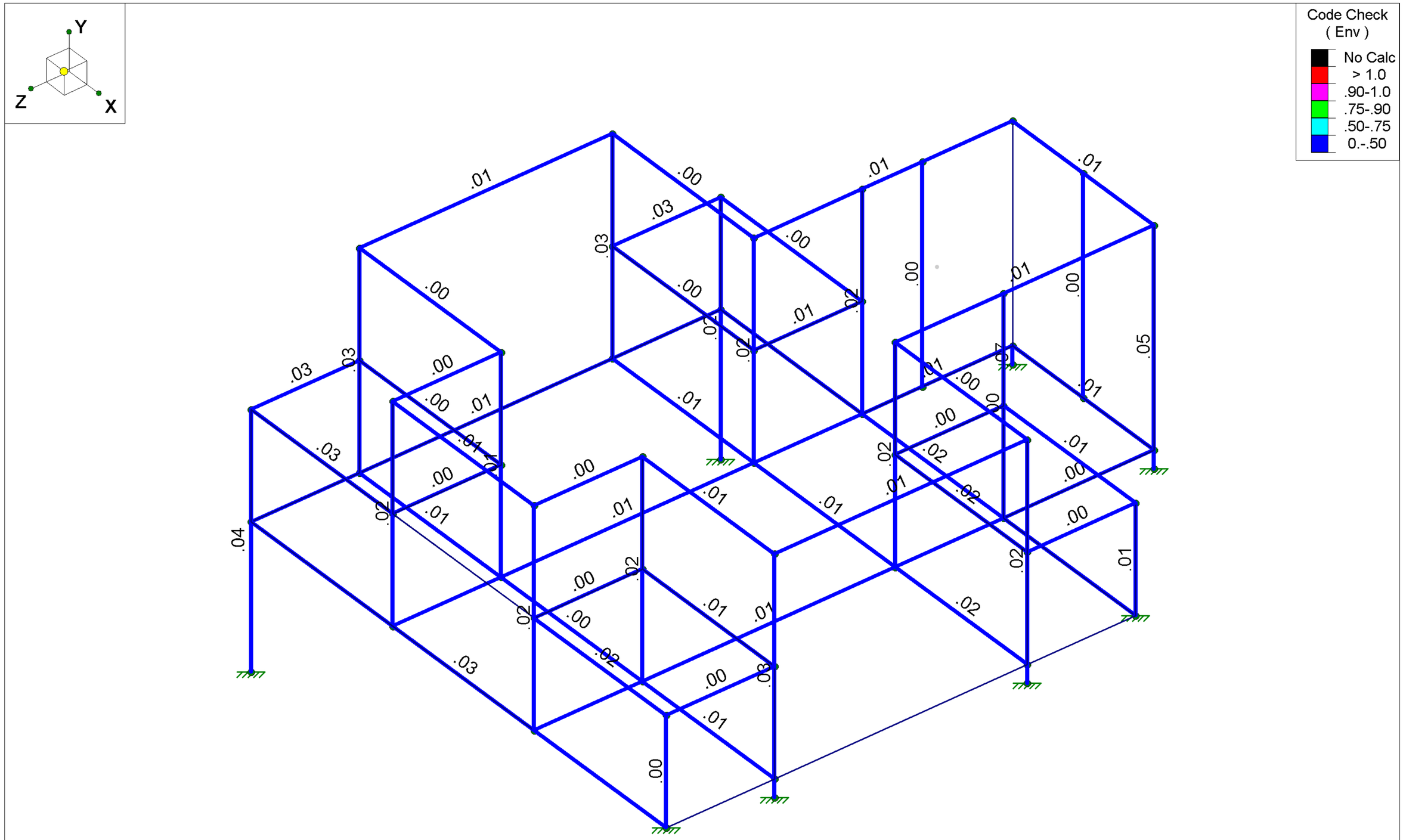

Member Code Checks Displayed (Enveloped)
Results for LC 1, LC 1

NEXIUS Inc.		SK - 2 6
JC	STEEL TOWER MOD	Apr 10, 2017 at 10:23 AM
	CODE CHECK	Tower Steel mod.r3d