DOOR AND FRAME SCHEDULE

DOOR						FRAME					NOTES		
No.	LOCATION	SIZE	TYP	MAT	FIN	TYP	MAT	FIN	HEAD	JAMB	GL	RATING	REMARKS
C571A	C.I.2. CLASSROOM C571	PR 3'-0" x 7'-0" x 1 3/4"	D	ALUM	--	6	ALUM	--	--	--	TEMP	--	1,8
C571BA	ROOM C571B	3'-0" x 7'-0" x 1 3/4"	A	SCWD	S&V	1	HM	PT	--	--	--	--	1,8
C571CA	CLOSET C571C	PR 3'-0" x 8'-0" x 1 3/4"	A	SCWD	S&V	1	HM	PT	--	--	--	--	--
C571CB	CLOSET C571C	PR 3'-0" x 8'-0" x 1 3/4"	A	SCWD	S&V	1	HM	PT	--	--	--	--	--
C572AA	SOUND - A C572A	3'-0" x 7'-0" x 1 3/4"	D	SCWD	S&V	1	HM	PT	--	--	TEMP-INSUL	--	PERIMETER ACOUSTIC SEALS
C574AA	OFFICE C574A	3'-0" x 7'-0" x 1 3/4"	A	SCWD	S&V	1	HM	PT	--	--	TEMP	--	--
C574BB	OFFICE C574B	3'-0" x 7'-0" x 1 3/4"	A	SCWD	S&V	1	HM	PT	--	--	TEMP	--	--
C575B	CORR C575	3'-0" x 7'-0" x 1 3/4"	D	SCWD	S&V	1	HM	PT	--	--	--	--	1,8
C576A	WAITING C576	3'-0" x 7'-0" x 1 3/4"	D	ALUM	--	5	ALUM	--	--	--	TEMP	--	1,8
C577A	OFFICE C577	3'-0" x 7'-0" x 1 3/4"	C	SCWD	S&V	1	HM	PT	--	--	TEMP	--	10
C578A	OFFICE C578	3'-0" x 7'-0" x 1 3/4"	C	SCWD	S&V	1	HM	PT	--	--	TEMP	--	10
C579A	OFFICE C579	3'-0" x 7'-0" x 1 3/4"	C	SCWD	S&V	1	HM	PT	--	--	TEMP	--	10
C580A	OFFICE C580	3'-0" x 7'-0" x 1 3/4"	C	SCWD	S&V	1	HM	PT	--	--	TEMP	--	10
C581A	OFFICE C581	3'-0" x 7'-0" x 1 3/4"	C	SCWD	S&V	1	HM	PT	--	--	TEMP	--	10
C582A	OFFICE C582	3'-0" x 7'-0" x 1 3/4"	C	SCWD	S&V	3	HM	PT	--	--	TEMP	--	10
C583A	OFFICE C583	3'-0" x 7'-0" x 1 3/4"	C	SCWD	S&V	3	HM	PT	--	--	TEMP	--	10
C585A	OFFICE C585	3'-0" x 7'-0" x 1 3/4"	C	SCWD	S&V	1	HM	PT	--	--	TEMP	--	10
C586A	OFFICE C586	3'-0" x 7'-0" x 1 3/4"	C	SCWD	S&V	1	HM	PT	--	--	TEMP	--	10
C587A	STUDY C587	3'-0" x 7'-0" x 1 3/4"	C	SCWD	S&V	1	HM	PT	--	--	TEMP	--	10
C588A	OFFICE C588	3'-0" x 7'-0" x 1 3/4"	C	SCWD	S&V	1	HM	PT	--	--	TEMP	--	10
C589A	WORK RM. C589	3'-0" x 7'-0" x 1 3/4"	C	SCWD	S&V	1	HM	PT	--	--	TEMP	--	10
C590A	OFFICE C590	3'-0" x 7'-0" x 1 3/4"	C	SCWD	S&V	4	HM	PT	--	--	TEMP	--	10
C591A	OFFICE C591	3'-0" x 7'-0" x 1 3/4"	C	SCWD	S&V	1	HM	PT	--	--	TEMP	--	10
C592A	MAKER SPACE C592	3'-6" x 7'-0" x 1 3/4"	D	ALUM	--	5	ALUM	--	--	--	TEMP	--	1,8

DOOR AND FRAME SCHEDULE

DOOR						FRAME					NOTES		
No.	LOCATION	SIZE	TYP	MAT	FIN	TYP	MAT	FIN	HEAD	JAMB	GL	RATING	REMARKS
A305A	CLASSROOM A305	3'-0" x 7'-0" x 1 3/4"	--	ETR	ETR	--	ETR	PT	--	--	--	--	NEW LOCKSET
A306A	OFFICE A306	3'-0" x 7'-0" x 1 3/4"	--	ETR	ETR	--	ETR	PT	--	--	--	--	NEW LOCKSET
A310A	CLASSROOM A310	3'-0" x 7'-0" x 1 3/4"	--	ETR	ETR	--	ETR	PT	--	--	--	--	NEW LOCKSET
A310B	CLASSROOM A310	3'-0" x 7'-0" x 1 3/4"	--	ETR	ETR	--	ETR	PT	--	--	--	--	NEW LOCKSET
A314A	OFFICE A314	3'-0" x 7'-0" x 1 3/4"	--	ETR	ETR	--	ETR	PT	--	--	--	--	NEW LOCKSET
A410A	CLASSROOM A410	3'-0" x 7'-0" x 1 3/4"	--	ETR	ETR	--	ETR	PT	--	--	--	--	NEW LOCKSET
A410B	CLASSROOM A410	3'-0" x 7'-0" x 1 3/4"	--	ETR	ETR	--	ETR	PT	--	--	--	--	NEW LOCKSET

E1 DOOR SCHEDULE

1/4" = 1'-0"

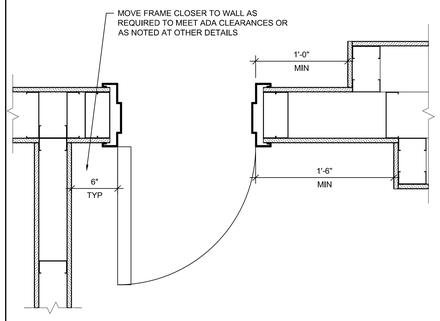

N15 STANDARD DOOR LOCATION DETAIL

1 1/2" = 1'-0"

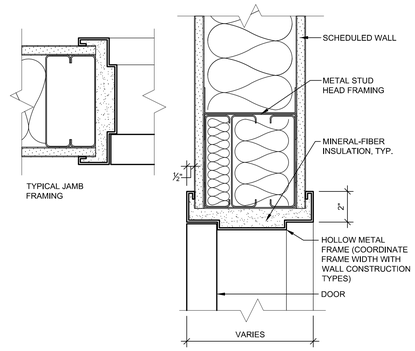

J15 INTERIOR DOOR HEAD / JAMB DETAIL

3" = 1'-0"

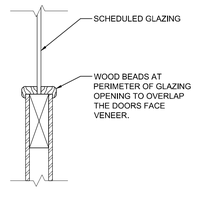

E15 DOOR GLAZING BEAD

3" = 1'-0"

TEMP = TEMPERED
PT = PAINTED
INSUL = INSULATED
WD = WOOD
HM = HOLLOW METAL
GALV = GALVANIZED
FRG = FIRE RATED GLASS
LAM= LAMINATED
ALUM = ALUMINUM
ANOD = ANODIZED
S&V = STAINED & VARNISH
CUF = CLEAR URETHANE FINISH
SS= STAINLESS STEEL

REFER TO SPECIFICATIONS FOR COMPLETE HARDWARE SCHEDULE

REMARKS
1: CLOSER
2: EXIT DEVICES
3: WEATHER-STRIPPING
4: LOW PROFILE THRESHOLD
5: MAGNETIC HOLD-OPEN
6: KICKPLATE
7: DOOR OPERATOR
8: PROXIMITY CARD READER
9: FLUSH MOUNTED EXIT DEVICE
10: OBSCURED GLASS APPLIED FILM
11: ALARMED EXIT DEVICES
12: SECURITY ALARM SYSTEM
13: UNDERCUT
14: TACTILE WARNING AT DOOR LEVER
15: PERIMETER ACOUSTICAL SEALS

NOTES
1. ALL INTERIOR DOORS AND CONNECTING OR ADJACENT FRAMES ARE TO HAVE TEMPERED GLAZING, UNO
2. ALL HOLLOW METAL DOOR AND WINDOWS TO BE PAINTED , UNO.
3. ALL EXTERIOR DOORS AND CONNECTING OR ADJACENT FRAME ARE TO HAVE 1" INSULATED TEMPERED GLAZING

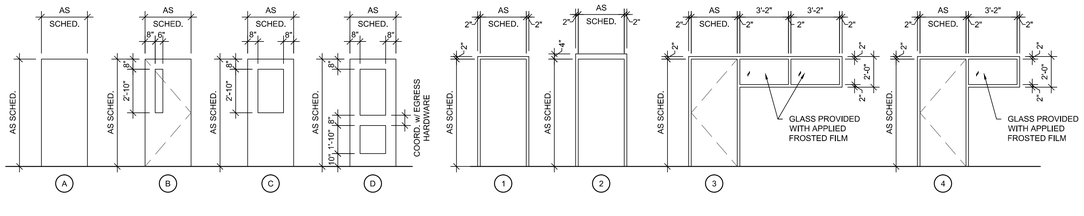

A1 DOOR AND DOOR FRAME TYPES

1/4" = 1'-0"

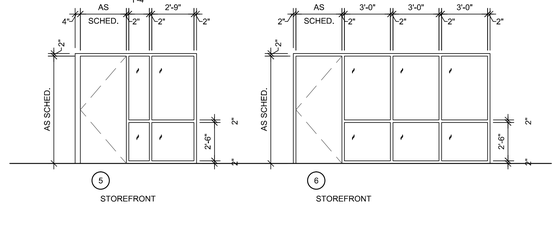

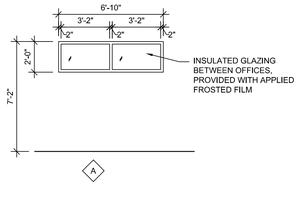

A8 WINDOW TYPES

1/4" = 1'-0"

REV.	DESCRIPTION	DATE
--	--	--
--	--	--
--	--	--
0	BID DOCUMENTS	01-13-17

LICENSED ARCHITECT MICHAEL E. JOHNSON No. 4224 STATE OF MAINE
01-13-17

NOT FOR CONSTRUCTION

WBRC ARCHITECTS• ENGINEERS
WWW.WBRCAE.COM
BANGOR, MAINE 207-947-4511
PORTLAND, MAINE 207-828-4511
SARASOTA, FLORIDA 941-556-0757

USM SCIENCE BUILDING OFFICE RENOVATIONS

PROJECT: PORTLAND, ME

DOOR AND WINDOW SCHEDULE AND TYPES

SHEET TITLE:
WBRC CAD FILE: 4128.10 – AE601
PROJECT No. 4128.10
GRAPHIC SCALE: 0" 1"
SCALE: AS NOTED
PROJECT MANAGER: MEJ
SHEET No.
DRAWN BY: RAD
CHECKED BY: MEJ
AE601

© COPYRIGHT 2016 WBRC

1/13/2017 7:26 AM T:\02 PROJECTS – MAINE\4101-4200\4128\10 USM SCIENCE BLDG CONSOLIDATION\2 DESIGN\DWGS\BLDG\USM SCIENCE BUILDING\SHEETS\4128.10-AE601 DOOR AND WINDOW SCHEDULE AND TYPES.DWG BOB.DUBOIS