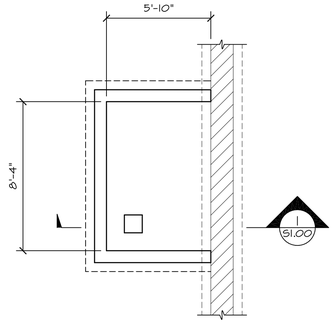

NEW ELEVATOR FOUNDATION PLAN
1/4"=1'-0"

SEE ARCHITECTURAL DRAWINGS FOR LOCATION

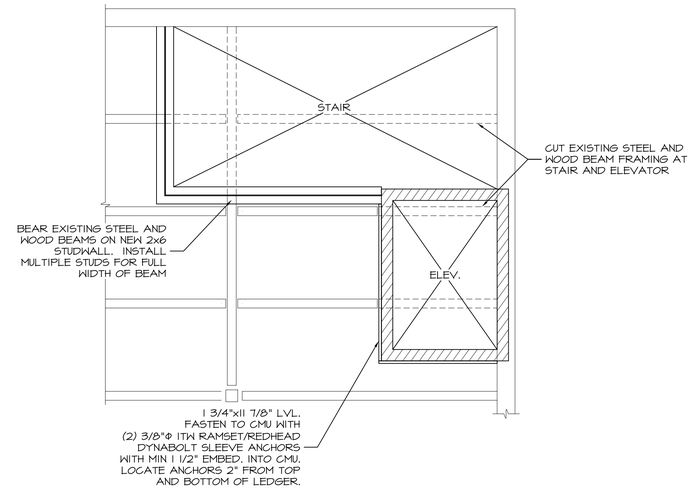

2ND FLOOR PLAN AT NEW STAIR/ELEVATOR
1/4"=1'-0"

SEE ARCHITECTURAL DRAWINGS FOR LOCATION

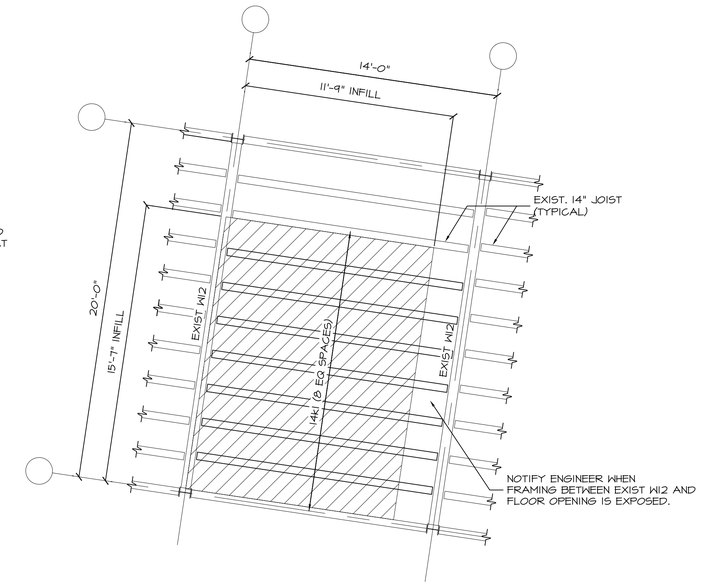

2ND FLOOR INFILL FRAMING PLAN AT EXIST STAIR/ELEV
1/4"=1'-0"

SEE ARCHITECTURAL DRAWINGS FOR LOCATION.

ALL DIMENSIONS ARE APPROXIMATE AND MUST BE FIELD VERIFIED.

FLOOR DECK IS 22 GAGE, 0.6C CSV CONFORM DECK BY VULCRAFT TOPPED WITH 2 1/2"± CONCRETE (MATCH EXIST. SLAB HEIGHT). REINFORCE SLAB WITH 6x6-W1.4xW1.4 WWF LOCATED 1" FROM TOP OF SLAB.

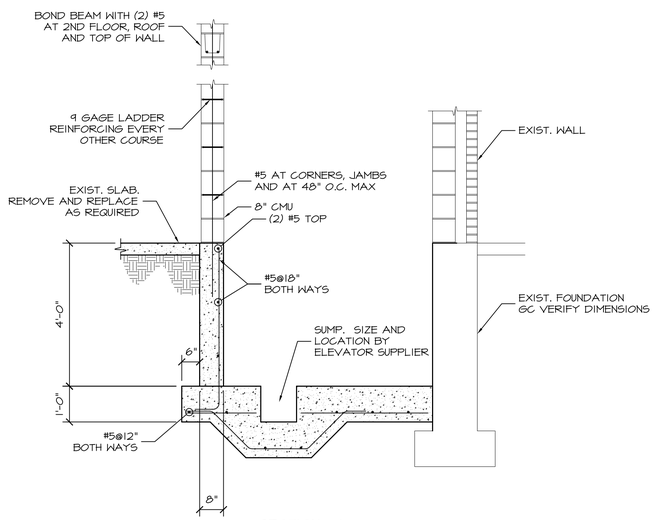

SECTION 1
1/2"=1'-0" S1.00

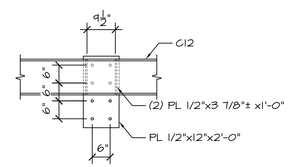

ELEVATION

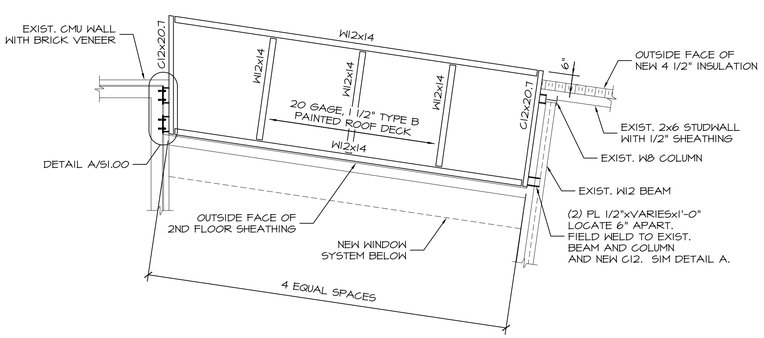

ENTRANCE CANOPY FRAMING PLAN
1/4"=1'-0"

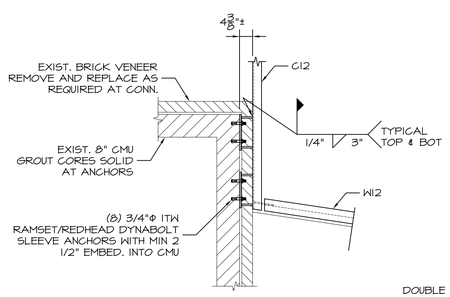

DETAIL A
1/2"=1'-0" S1.00

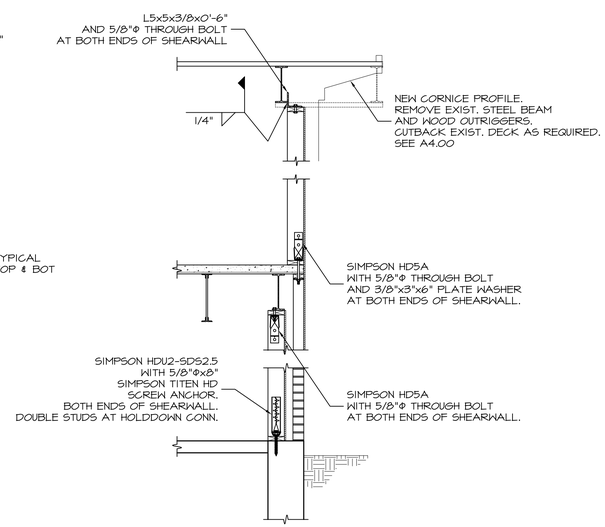

TYPE 1 SHEARWALL SECTION
1/2"=1'-0"

SEE A2.00, EXTERIOR ELEVATIONS FOR LOCATIONS, LENGTHS AND FIXED WIDOW OPENINGS.

NAIL SHEATHING WITH 8d NAILS SPACED AT 4" AT ALL SHEATHING PANEL EDGES AND AT 12" AT INTERMEDIATE STUDS.

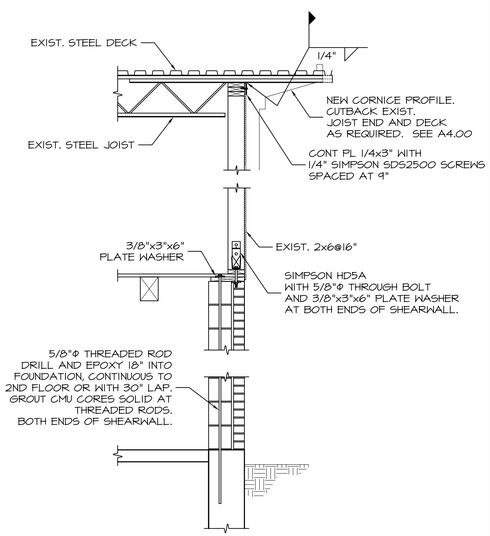

TYPE 2 SHEARWALL SECTION
1/2"=1'-0"

SEE A2.00, EXTERIOR ELEVATIONS FOR LOCATIONS, LENGTHS AND FIXED WIDOW OPENINGS.

NAIL SHEATHING WITH 8d NAILS SPACED AT 4" AT ALL SHEATHING PANEL EDGES AND AT 12" AT INTERMEDIATE STUDS.

STRUCTURAL DESIGN CONSULTING
22 Oakmont Drive
Old Orchard Beach, ME
04064-4121
Tel 207.934.8028
Fax 207.934.8039

STATE OF MAINE
DAVID TETREAULT
4840
LICENSED PROFESSIONAL ENGINEER

OWNER:

ARCHETYPE, P.A.
ARCHITECTS
48 Union Wharf Portland, Maine 04101
(207) 772-6022 Fax (207) 772-4056

Project:
43 BAXTER BLVD.
PORTLAND, MAINE

Revisions:

Scale
As Noted

Date
06/28/10

STRUCTURAL PLANS AND DETAILS

S1.00