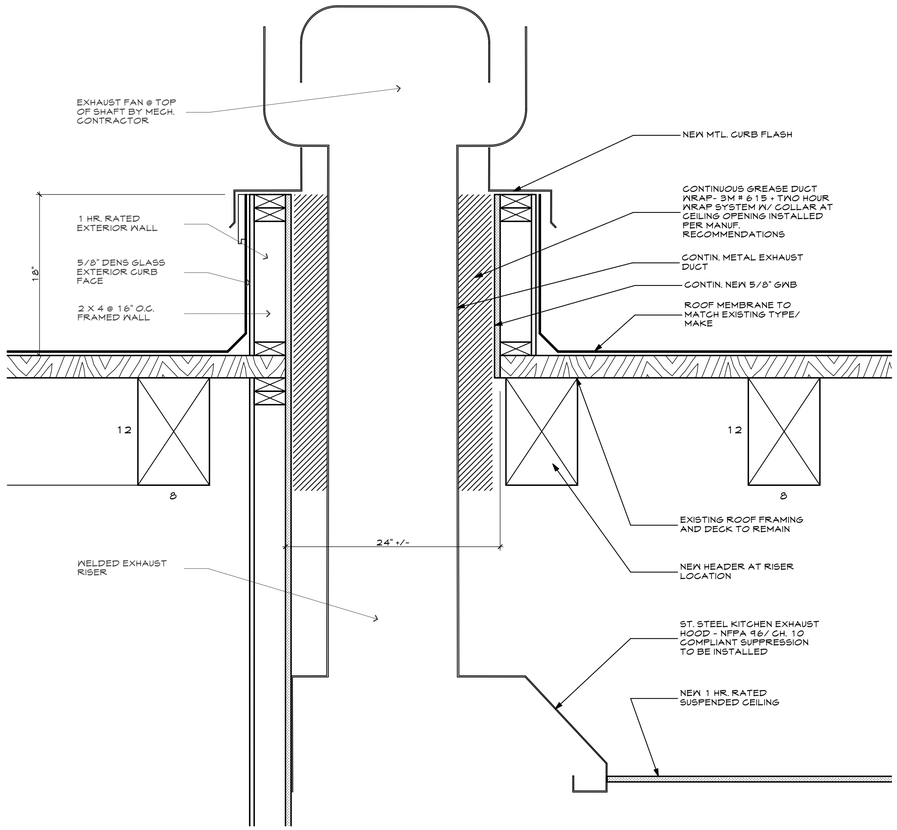

1 A5.4 EXHAUST HOOD DETAIL

SCALE: 1 1/2" = 1'-0"

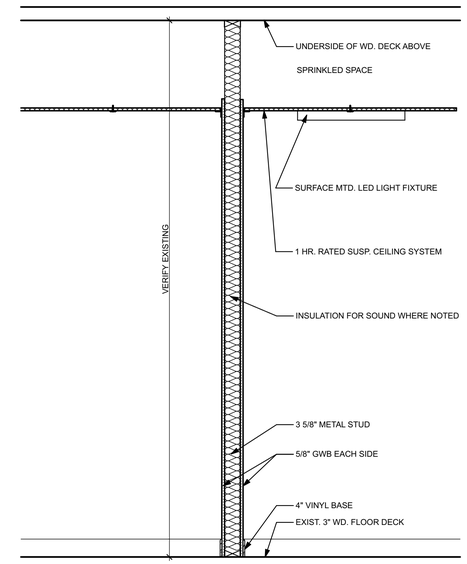

2 A5.4 UL (L206) TYP. INT. WALL- GROUND FLOOR

SCALE: 3/4" = 1'-0"

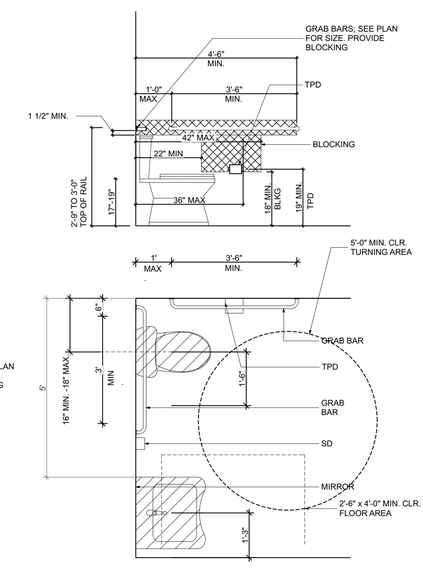

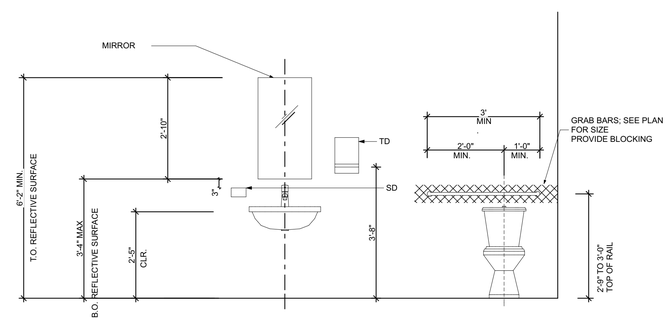

3 A5.4 BATH ADA GUIDE DETAILS

SCALE: 1/2" = 1'-0"

PROGRESS SET - NOT FOR CONSTRUCTION

THIS DRAWING IS AN INSTRUMENT OF SERVICE AND SHALL REMAIN THE PROPERTY OF WHIPPLE CALLENDER ARCHITECTS. IT SHALL NOT BE USED FOR ANY OTHER PURPOSE THAT FOR WHICH IT IS SPECIFICALLY FURNISHED

LIBERTY BAY

343 FOREST AVENUE PORTLAND, MAINE 04101

WHIPPLE CALLENDER ARCHITECTS

136 PLEASANT AVE.
PORTLAND, ME 04103
P 207.775.2696
F 207.775.3631
www.whipplecallender.com

MARK	DATE	DESCRIPTION

DATE: 6/2/17 SFMO APPLICATION SET

CHECKED BY: JAD

DRAWN BY: CLBC

JOB: LIB 2017

SHEET TITLE: DETAILS

A5.4