Submittal

Reviewed for Code Compliance
Inspections Division
Approved with Conditions

Date: 06/10/16

Prepared For: Dave Kelley

Date: *April 29, 2016*

Customer P.O. Number: **S22434**
Customer Project Number:

Sold To: AAA Energy

Job Number:
Job Name:
AAA Energy - Dave - Portland Housing

Trane U.S. Inc. dba Trane is pleased to provide the enclosed submittal for your review and approval.

Product Summary

Qty	Product
1	Packaged Gas/Electric Rooftop Units

The attached information describes the equipment we propose to furnish for this project, and is submitted for your approval.

Daniel Broderick
Trane
860 Spring Street, Unit 1
Westbrook, ME 04092
Phone: (207) 828-1777
Cell:
Fax: (207) 828-1511

Table Of Contents

Product Summary .....

Packaged Gas/Electric Rooftop Units (Item A1) .....

Tag Data .....
Product Data .....
Performance Data .....
Mechanical Specifications .....
Unit Dimensions .....
Weight, Clearance & Rigging Diagram .....
Accessory .....

Field Installed Options - Part/Order Number Summary **15**

Packaged Gas/Electric Rooftop Units 15

RESURGAM CITY OF PORTLAND, MAINE
Reviewed for Code Compliance
Inspections Division
Approved with Conditions
Date: 06/10/16

Tag Data - Packaged Gas/Electric Rooftop Units (Qty: 1)

Item	Tag(s)	Qty	Description	Model Number
A1	RTU-1	1	15 Ton VSD	YZD180F3RVB--DHA1C2B600000000000

RESURGAM CITY OF PORTLAND, MAINE
Reviewed for Code Compliance
Inspections Division
Approved with Conditions
Date: 06/10/16

Product Data - Packaged Gas/Electric Rooftop Units

Item: A1 Qty: 1 Tag(s): RTU-1

Gas/Electric
Ultra high efficiency
Downflow
15 Ton
208-230/60/3
Reliatel
Gas Heat - Modulating
Economizer Dry Bulb 0-100% with barometric relief
VAV oversized motor w shaft ground ring
Hinged panels/Standard Filters
Standard condenser coil with hail guard
Through the base electric/gas
Unit Mounted Circuit Breaker
Powered convenience outlet
BACnet communications interface
Power exhaust (Fld)

Performance Data - Packaged Gas/Electric Rooftop Units

Tags	RTU-1
Design Airflow (cfm)	6000
Cooling Entering Dry Bulb (F)	78.00
Cooling Entering Wet Bulb (F)	65.00
Ent Air Rel Humidity (%)	49.92
Ambient Temp (F)	95.00
Cooling Leaving Unit DB (F)	58.58
Cooling Leaving Unit WB (F)	56.19
Gross Total Capacity (MBh)	175.62
Gross Sensible Capacity (MBh)	142.64
Gross Latent Capacity (MBh)	32.98
Net Total Capacity (MBh)	161.39
Net Sensible Capacity (MBh)	128.41
Net Sensible Heat Ratio (Number)	0.80
Heating EAT (F)	50.00
Heating LAT (F)	93.01
Heating Temp Rise (F)	43.01
Output Htg Capacity (MBh)	280.00
Output Htg Capacity w/Fan (MBh)	294.23
Design ESP (in H2O)	1.750
Component SP Add (in H2O)	0.200
Field Supplied Drive Kit Required	None
Indoor Mtr. Operating Power (bhp)	4.52
Indoor RPM (rpm)	882
Indoor Motor Power (kW)	3.36
Outdoor Motor Power (kW)	0.78
Compressor Power (kW)	11.74
System Power (kW)	15.89
IPLV @ AHRI (IPLV)	0.0
MCA (A)	80.00
MOP (A)	90.00
Compressor 1 RLA (A)	15.90
Compressor 2 RLA (A)	15.90
Condenser Fan FLA (A)	5.30
Evaporator Fan FLA (A)	16.70
Fan Motor Heat (MBh)	14.23
Evap Coil Leav Air Temp (DB) (F)	55.99
Evap Coil Leav Air Temp (WB) (F)	55.15
Dew Point Temp (F)	54.59
Rated capacity (AHRI) (MBh)	172.00
Exhaust fan power (kW)	0.56
Refrig charge (HFC-410A) - ckt 1 (lb)	14.5
Refrig charge (HFC-410A) - ckt 2 (lb)	9.8
ASHRAE 90.1	Yes
Saturated Suction Temp Circuit 1 (F)	51.38
Saturated Discharge Temp Circuit 1 (F)	116.40
Saturated Suction Temp Circuit 2 (F)	54.18
Saturated Discharge Temp Circuit 2 (F)	116.51
Total Static Pressure (in H2O)	1.950

RESURGAM CITY OF PORTLAND, MAINE
Reviewed for Code Compliance
Inspections Division
Approved with Conditions
Date: 06/10/16

Mechanical Specifications - Packaged Gas/Electric Rooftop Units
Item: A1 Qty: 1 Tag(s): RTU-1

RESURGAM CITY OF PORTLAND, MAINE
Reviewed for Code Compliance
Inspections Division
Approved with Conditions
Date: 06/10/16

Modulating Gas Heat
The heating section shall have a drum and tube heat exchanger design using stainless steel
speed forced combustion blower shall supply premixed fuel to a single burner ignited by a pil
system. The leaving air temperature shall be communicated to the unit controls (ReliaTel) via
This information along with the space temperature will be used to modulate the heating outpu

In order to provide reliable operation, a pressure switch will require blower operation to initiate

On an initial call for heat the combustion blower shall purge the heat exchanger 45 seconds before ignition. The heat exchanger will operate at full fire initially and then modulate down to match the desired discharge air temperature. After three unsuccessful ignition attempts, the entire heating system shall be locked out until manually reset.

Units shall be suitable for use with natural gas.

Tool-less Hail Guards
Tool-less, hail protection quality coil guards are available for condenser coil protection.

Hinged Access Doors
Sheet metal hinges are available on the Filter/Evaporator Access Door and the Compressor/Control Access Door. This option is available on all downflow models.

BACnet Communications
The BACnet communications interface allows the unit to communicate directly with a generic open protocol BACnet MS/TP Network Building Automation System Controls.

Accessory - Powered Exhaust
The powered exhaust shall provide exhaust of return air, when using an economizer, to maintain better building pressurization.

VAV Operation
The VFD shall receive a 0-10 Vdc signal from the unit controls based upon supply static pressure and shall cause the drive to accelerate or decelerate as required to maintain the supply static pressure setpoint. When subjected to high ambient return conditions the VFD shall reduce its output frequency to maintain operation.

General - Ultra High
The units shall be dedicated downflow or horizontal airflow. The operating range shall be between 125F and 0F in cooling as standard from the factory for all units. Cooling performance shall be rated in accordance with ARI testing procedures. All units shall be factory assembled, internally wired, fully charged with R-410A, and 100 percent run tested to check cooling operation, fan and blower rotation and control sequence, before leaving the factory. Wiring internal to the unit shall be colored and numbered for simplified identification. This product has been evaluated to Bi-National Standard CAN/CSA-C22.2 No. 236-05, UL 1995; and is eligible for CNL (Canadian National Standards Listed) and USL (United States Standards Listed).

Casing - Ultra High
Unit casing shall be constructed of zinc coated, heavy gauge, galvanized steel. Exterior surfaces shall be cleaned, phosphatized, and finished with a weather-resistant baked enamel finish. Unit's surface shall be tested 672 hours in a salt spray test in compliance with ASTM B117. Cabinet construction shall allow for all maintenance on one side of the unit. In order to ensure a water and air tight seal, service panels shall have lifting handles and no more than three screws to remove. All exposed vertical panels and top covers in the indoor air section shall be insulated with a 1/2-inch, 1-pound density foil-faced, fire-resistant, permanent, odorless, glass fiber material. The base of the downflow unit shall be insulated with 1/2-inch, 1-pound density foil-faced, closed-cell material. The downflow unit¿s base pan shall have no penetrations within the perimeter of the curb other than the raised 1 1/8-inch high supply/return openings to provide an added water integrity precaution,
if the condensate drain backs up. The base of the unit shall have provisions for forklift and crane lifting.

RESURGAM CITY OF PORTLAND, MAINE
Reviewed for Code Compliance
Inspections Division
Approved with Conditions
Date: 06/10/16

Compressors - Ultra High
The Trane eFlex variable speed compressor shall be capable of speed modulation from 15H The minimum unit capacity shall be 25% of full load or less. The compressor motor shall be a Each variable speed compressor shall be matched with a specially designed, refrigerant-cool drive which modulates the speed of the compressor motor and provides several compressor Control of the variable speed compressor and inverter control, as well as tandem direct-drive, shall be integrated with the ReliaTel unit controller to ensure optimal equipment reliability and ompressor shall have a crankcase heater installed, properly sized to minimize the amount of liquid refrigerant present in the oil sump during off cycles.

Controls - Ultra High
Unit shall be completely factory wired with necessary controls and contactor pressure lugs or terminal block for power wiring. Unit shall provide an external location for mounting a fused disconnect device. ReliaTel controls shall be provided for all 24-volt control functions. The resident control algorithms shall make all heating, cooling, and/or ventilating decisions in response to electronic signals from sensors measuring indoor and outdoor temperatures. The control algorithm maintains accurate temperature control, minimizes drift from set point, and provides better building comfort. A centralized control shall provide anti-short cycle timing and time delay between compressors to provide a higher level of machine protection.

Crankcase Heaters - Ultra High
These band heaters provide improved compressor reliability by warming the oil to prevent migration during off-cycles or low ambient conditions. These are standard on all Voyager models.

Discharge Line Thermostat - Ultra High
A bi-metal element discharge line thermostat is installed as a standard option on the discharge line of each system. This standard option provides extra protection to the compressors against high discharge temperatures in case of loss of charge, extremely high ambient and other conditions which could drive the discharge temperature higher. Discharge line thermostat is wired in series with high pressure control. When the discharge temperature rises above the protection limit, the bi-metal disc in the thermostat switches to the off position, opening the 24 Vac circuit. When the temperature on the discharge line cools down, the bi-metal disc closes the contactor circuit, providing power to the compressor. When the thermostat opens the fourth time, the ReliaTel control must be manually reset to resume operation on that stage.

Evaporator and Condenser Coils - Ultra High
Microchannel coils will be burst tested by the manufacturer. Internally finned, 5/16¿ copper tubes mechanically bonded to a configured aluminum plate fin shall be standard for evaporator coils. Microchannel condenser coils shall be standard on all units. Coils shall be leak tested to ensure the pressure integrity. The evaporator coil and condenser coil shall be leak tested to 225 psig and pressure tested to 450 psig. Sloped condensate drain pans are standard.

Filters - Ultra High
Two inch standard filters shall be factory supplied on all units. Optional MERV 8 or MERV 13 filters with filter removal tool shall be available.

Gas Heating Section - Ultra High
The heating section shall have a drum and tube heat exchanger design using corrosion resistant steel components. A forced combustion blower shall supply premixed fuel to a single burner ignited by a pilotless hot surface ignition system. In order to provide reliable operation, a negative pressure gas valve shall be used on standard furnaces and a pressure switch on furnaces with modulating heat that requires blower operation to initiate gas flow. On an initial call for heat, the combustion blower shall purge the heat exchanger 45 seconds before ignition. After three unsuccessful ignition attempts, the entire heating system shall be locked out until manually reset at the thermostat. Units shall be suitable for use with natural gas or propane (field installed kit) and shall also comply with California requirements for low NOx emissions. The 12½- 17½ tons shall have two stage heating (Gas/Electric only).

RESURGAM CITY OF PORTLAND, MAINE
Reviewed for Code Compliance
Inspections Division
Approved with Conditions
Date: 06/10/16

Indoor Fan - Ultra High
Units above shall have belt driven, FC centrifugal fans with adjustable motor sheaves. Units w have an adjustable idler-arm assembly for quick-adjustment of fan belts and motor sheaves. A thermally protected. Oversized motors shall be available for high static application. All indoor Energy Policy Act of 1992 (EPACT).

Outdoor Fans - Ultra High
The outdoor fan shall be direct-drive, statically and dynamically balanced, draw-through in the position. The fan motor(s) shall be permanently lubricated and shall have bulletining thermal c

Phase Monitor - Ultra High
The Phase Monitor is a three-phase line monitor module that protects against phase loss, phase reversal and phase unbalance. It is intended to protect compressors from reverse rotation. It has an operating input voltage range of 190-600 Vac, and LED indicators for ON and FAULT. There are no field adjustments and the module will automatically reset from a fault condition.

Refrigerant Circuits - Ultra High
Each refrigerant circuit shall have thermostatic expansion devices, service pressure ports, and refrigerant line filter driers factory installed as standard. An area shall be provided for replacement suction line driers.

CO2 Sensor Wiring - Ultra High
The unit wiring for field installed C02 sensors. Factory-installed C02 sensor wiring saves time and ensures proper unit connections for the field installed C02 sensor kits.

High Short Circuit Current Rating - Ultra High
Unit shall be provided with electrical subsystem that will with stand fault currents up to 65kA (208/230, 460 VAC) compliant with UL 1995 and NEC 440.4 (B). Each compressor circuit and the indoor fan shall have dedicated overcurrent protection. Three phase motors shall be protected by Class J time delay fuses. Single phase motors shall be protected by Class CC time delay fuses. All transformers shall also be protected with Class CC time delay fuses. Contactors shall be din rail mounted.

Hinged Access Doors - Ultra High
Sheet metal hinges are available on the Filter/Evaporator Access Door and the Compressor/Control Access Door. This option is available on all downflow models.

Horizontal Side Access with Circuit Breaker - Ultra High
This option is a thermal magnetic, molded case, HACR Circuit Breaker with provisions for through the base electrical connections. The circuit breaker will be installed in a water tight enclosure in the unit with access through a swinging door. Factory wiring will be provided from the switch to the unit high voltage terminal block. The circuit breaker will provide overcurrent protection, be sized per NEC and UL guidelines, and be agency recognized by UL/CSA.

Powered or Unpowered Convenience Outlet - Ultra High
This option is a GFCI, 120V/15amp, 2-plug, convenience outlet, either powered or unpowered. When the convenience outlet is powered, a service receptacle disconnect will be available. The convenience outlet is powered from the line side of the disconnect or circuit breaker, and therefore will not be affected by the position of the disconnect or circuit breaker. This option can only be ordered when the Through the Base Electrical with either the Disconnect Switch, or Circuit Breaker, option is ordered. This option is available on all downflow models (Gas/Electric only).

Through the Base Electrical with Circuit Breaker - Ultra High
This option is a thermal magnetic, molded case, HACR Circuit Breaker with provisions for through the base electrical connections. The circuit breaker will be installed in a water tight enclosure in the unit with access through a swinging door. Factory wiring will be provided from the switch to the unit high voltage terminal block. The circuit breaker will provide overcurrent protection, be sized per NEC and UL guidelines, and be agency recognized by UL/CSA.

RESURGAM CITY OF PORTLAND, MAINE
Reviewed for Code Compliance
Inspections Division
Approved with Conditions
Date: 06/10/16

BACnet Communications Interface - Ultra High
This option shall be provided to allow the unit to communicate directly with a generic open pro
Network Building Automation System Controls.

Barometric Relief - Ultra High
Designed to be used on downflow units, barometric relief is an unpowered means of relieving

Economizer-Downflow - Ultra High
The assembly includes fully modulating 0-100% motor and dampers, barometric relief, minimum position setting, preset linkage, wiring harness with plug, fixed dry bulb and spring return actuator. The barometric relief damper shall be standard with the downflow economizer and shall provide a pressure operated damper that shall be gravity closing and shall prohibit entrance of outside air during the equipment ¿off¿ cycle. Solid state enthalpy and differential enthalpy control shall be field-installed.

Indoor Fan Motor Shaft Grounding Ring - Ultra High
Shaft grounding rings are used on all VFD driven motors to provide a conductive discharge path away from the motor bearings to ground. Bearing Protection Ring shall be maintenance free circumferential ring of conductive micro fibers that discharges voltages to ground.

Oversized Motors - Ultra High
Oversized motors shall be available for high static applications.

Tool-less Hail Guards - Ultra High
Tool-less, hail protection quality coil guards are available for condenser coil protection.

Powered Exhaust - Ultra High
The powered exhaust shall provide exhaust of return air, when using an economizer, to maintain better building pressurization.

Unit Dimensions - Packaged Gas/Electric Rooftop Units
Item: A1 Qty: 1 Tag(s): RTU-1

Reviewed for Code Compliance
Inspections Division
Approved with Conditions

Date: 06/10/16

NOTES:
1. GAS CONNECTION PIPE SIZE
2. THRU -THE -BASE GAS AND
ON ALL UNITS. (SELECTED C
3. VERIFY WEIGHT, CONNECTI
INSTALLER DOCUMENTS B

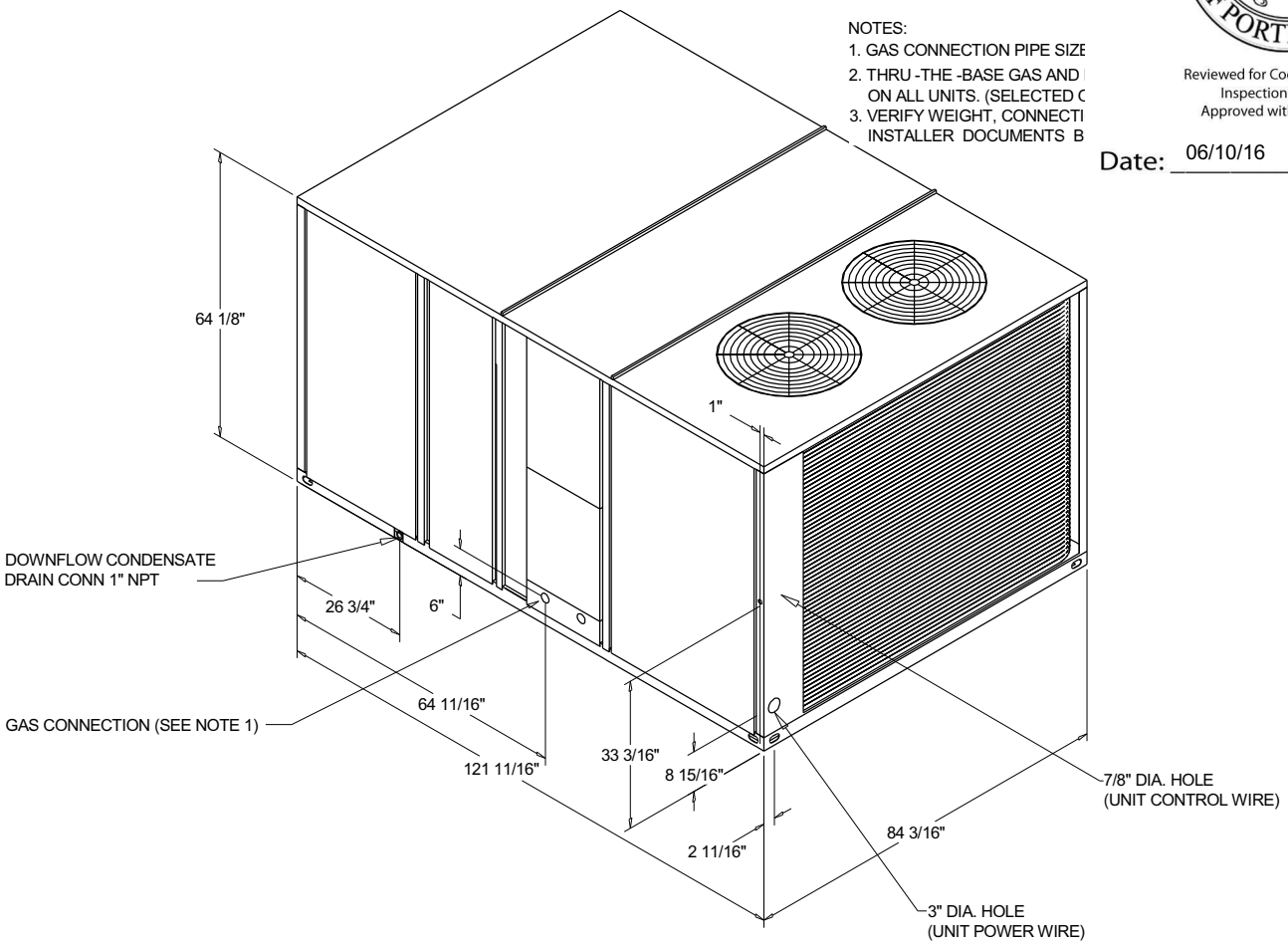

PACKAGED GAS/ELECTRIC - DOWNFLOW

ISOMETRIC DRAWING

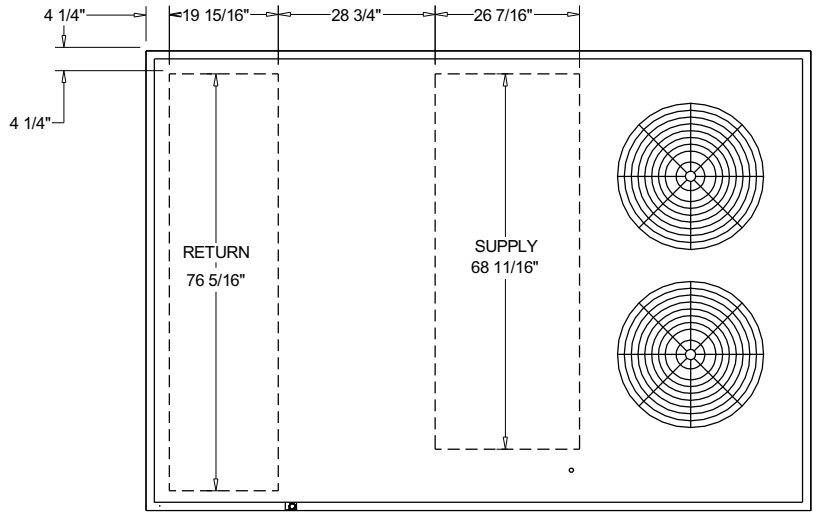

PACKAGED GAS/ELECTRIC - DOWNFLOW

PLAN VIEW DRAWING

Unit Dimensions - Packaged Gas/Electric Rooftop Units
Item: A1 Qty: 1 Tag(s): RTU-1

RESURGAM CITY OF PORTLAND, MAINE
Reviewed for Code Compliance
Inspections Division
Approved with Conditions
Date: 06/10/16

ELECTRICAL / GENERAL DATA

GENERAL PERFORMANCE

Model (Ton):	YZD180F
Unit Operating Voltage Range:	187-253
Unit Primary Voltage:	208
Unit Secondary Voltage:	230
Unit Hertz:	60
Unit Phase:	3
EER: (5)	12.5

Standard Motor (1) (3)

Minimum Circuit Ampacity:	73.0/73.0
Maximum Fuse Size:	80.0/80.0
Maximum (HACR) Circuit Breaker:	80.0/80.0

Standard Oversized Motor (1) (4)

Minimum Circuit Ampacity:	
Maximum Fuse Size:	
Maximum (HACR) Circuit Breaker:	

Accessory Oversized Motor (1) (4)

Minimum Circuit Ampacity:	
Maximum Fuse Size:	
Maximum (HACR) Circuit Breaker:	

GAS HEATING

Heating Models:	Modulating Heat
Heating and 1 Stage Input (Btu/h)	350000/140000
Heating and 1 Stage Output (Btu/h):	286500/113400
Min./Max. Gas Input - Pressure Natural or LP (in w.c):	2.5/14.0 (Natural only)
Gas Connection Pipe Size:	3/4"

COMPRESSOR

	Circuit(s)
Number:	3
Horsepower:	4.0
Phase:	3
Rated Load Amps:	15.9/15.9
Locked Rotor Amps:	110.0/110.0
VFD Input Amps:	16.0

INDOOR MOTOR

Standard Motor

Number: (3)	1
Horsepower:	3.0
Motor Speed (RPM):	1740
Phase:	3
Full Load Amps:	10.6
Locked Rotor Amps:	81.0

Standard Oversized Motor (4)

Number:	1
Horsepower:	5.0
Motor Speed (RPM):	3450
Phase:	3
Full Load Amps:	16.7
Locked Rotor Amps:	109.8

Accessory Oversized Motor (4)

Number:	
Horsepower:	
Motor Speed (RPM):	
Phase:	
Full Load Amps:	
Locked Rotor Amps:	

OUTDOOR MOTOR

Number:	2
Horsepower:	0.5
Motor speed (RPM):	1140
Phase:	1
Full Load Amps:	5.3
Locked Rotor Amps:	-

POWER EXHAUST
(Field Installed Power Exhaust)

Horsepower:	0.75
Motor Speed (RPM):	1040
Phase:	1
Full Load Amps:	6.6
Locked Rotor Amps:	13.5

COMBUSTION BLOWER MOTOR
(Gas-Fired Heating only)

Horsepower:	0.25
Motor Speed (RPM):	4600/950
Phase:	3
Full Load Amps:	0.8
Locked Rotor Amps:	2.0

FILTER

Type:	Throwaway
Furnished:	Yes
Number:	8/4
Recommended Size:	20"x20"x2" 20"x16"x2"

REFRIGERANT (2)

	Circuit #1 / 2
Type:	R410A
Factory Charge Circuit #1 / 2:	14.5 lb/9.8 lb

NOTES:
1. Maximum (HACR) Circuit Breaker sizing is for installations in the United States only.
2. Refrigerant charge is an approximate value. For a more precise value, see unit nameplate and service instructions.
3. Value include Standard Motor.
4. Value include Oversized Motor
5. EER is rated at AHRI conditions and in accordance with DOE test procedures.

Weight, Clearance & Rigging Diagram - Packaged Gas/Electric Rooftop Units
Item: A1 Qty: 1 Tag(s): RTU-1

Reviewed for Code Compliance
Inspections Division
Approved with Conditions

Date: 06/10/16

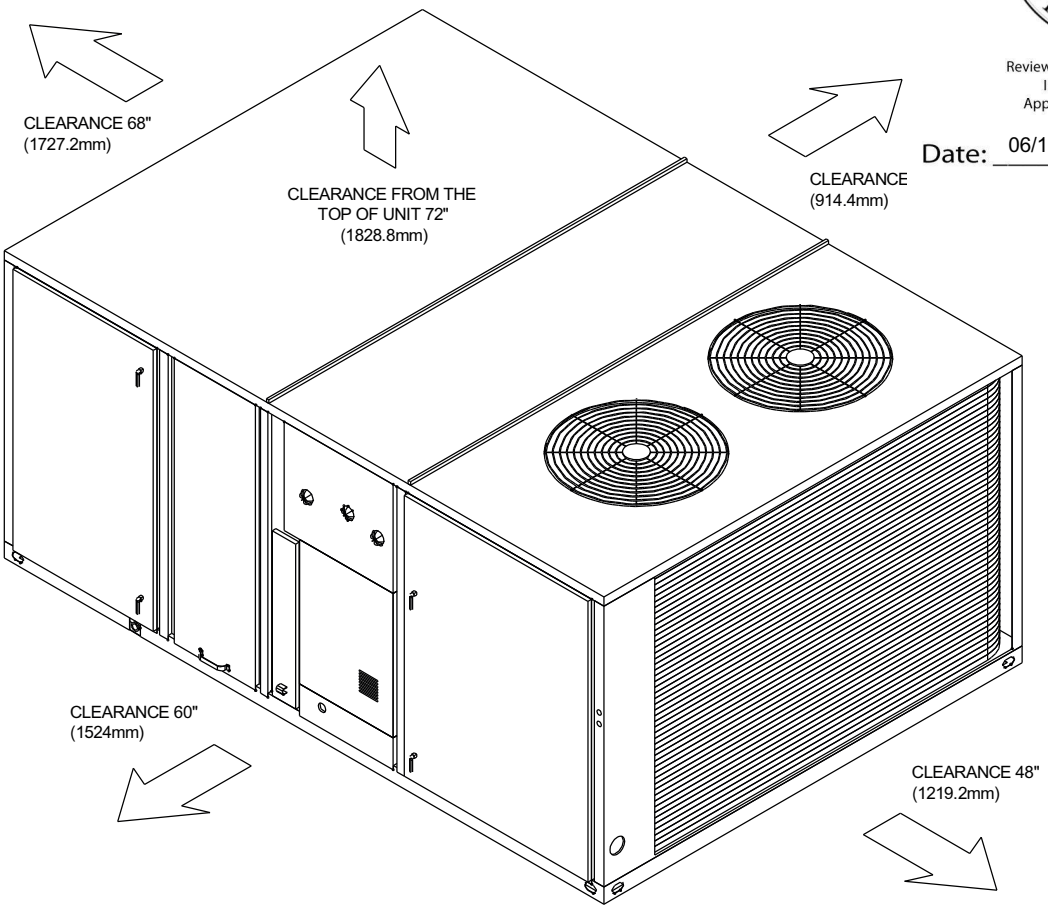

DOWNFLOW-PACKAGED GAS/ELECTRIC CLEARANCE

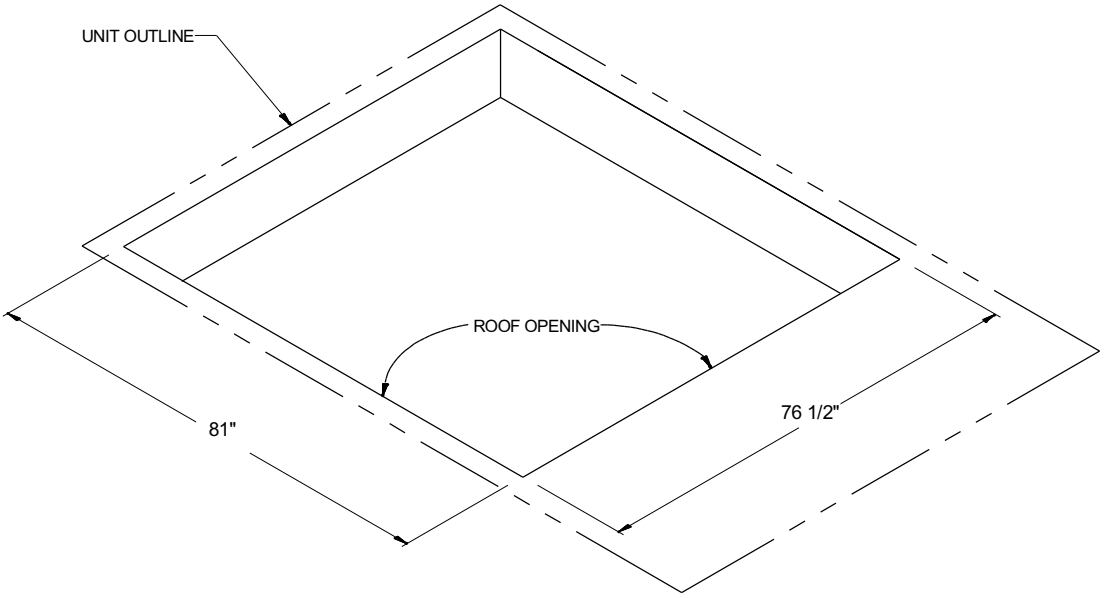

DOWNFLOW-PACKAGED GAS/ELECTRIC ROOF OPENING CLEARANCE

Weight, Clearance & Rigging Diagram - Packaged Gas/Electric Rooftop Units

Item: A1 Qty: 1 Tag(s): RTU-1

RESURGAM CITY OF PORTLAND, MAINE
Reviewed for Code Compliance
Inspections Division
Approved with Conditions
Date: 06/10/16

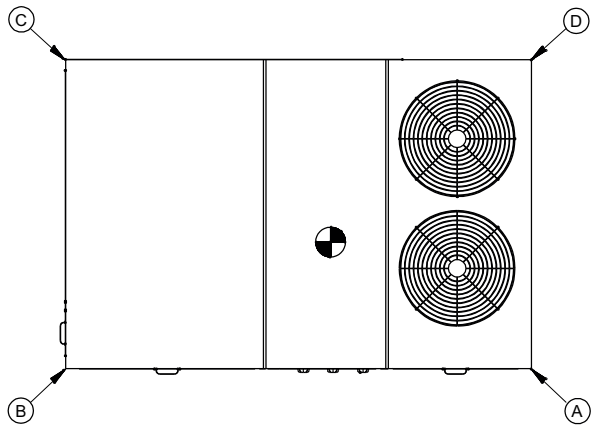

CORNER WEIGHT

INSTALLED OPTIONS NET WE

Accessory	
Economizer	
Motorized Outside Air Damper	
Manual Outside air Damper	
Oversized Motor	
High Static Drive	
Thru the Base Electrical	23.0 lb
Unit Mounted Circuit Breaker	10.0 lb
Unit Mounted Disconnect	
Power Exhaust	95.0 lb
Hinged Doors	27.0 lb
Zone Sensor	
LPG Conversion Kit	
Powered Convenience Outlet	38.0 lb
Roof Curb	

BASE UNIT WEIGHTS		CORNER WEIGHTS				CENTER OF GRAVITY	
SHIPPING	NET	A	B	C	D	E	F
2681.0 lb	2197.0 lb	696.0 lb	603.0 lb	412.0 lb	485.0 lb	56"	34"

NOTE:
1. CORNER WEIGHTS ARE GIVEN FOR INFORMATION ONLY.
2. TO ESTIMATE SHIPPING WEIGHT OF OPTION/ACCESSORIES ADD 5 LBS TO NET WEIGHT.
3. NET WEIGHT OF OPTIONAL ACCESSORIES SHOULD BE ADD TO UNIT WEIGHT WHEN ORDERING FACTORY INSTALLED ACCESSORIES.
4. WEIGHTS FOR OPTIONS NOT LISTED ARE < 5 LBS.
5. WEIGHT ARE OF BASE UNIT ONLY. FOR TOTAL WEIGHT, 10 DIGIT FACTORY INSTALLED OPTION (ECONOMIZER AND/OR OVERSIZED MOTOR OR FIOP/ACCESSORY WEIGHT MUST BE ADDED.

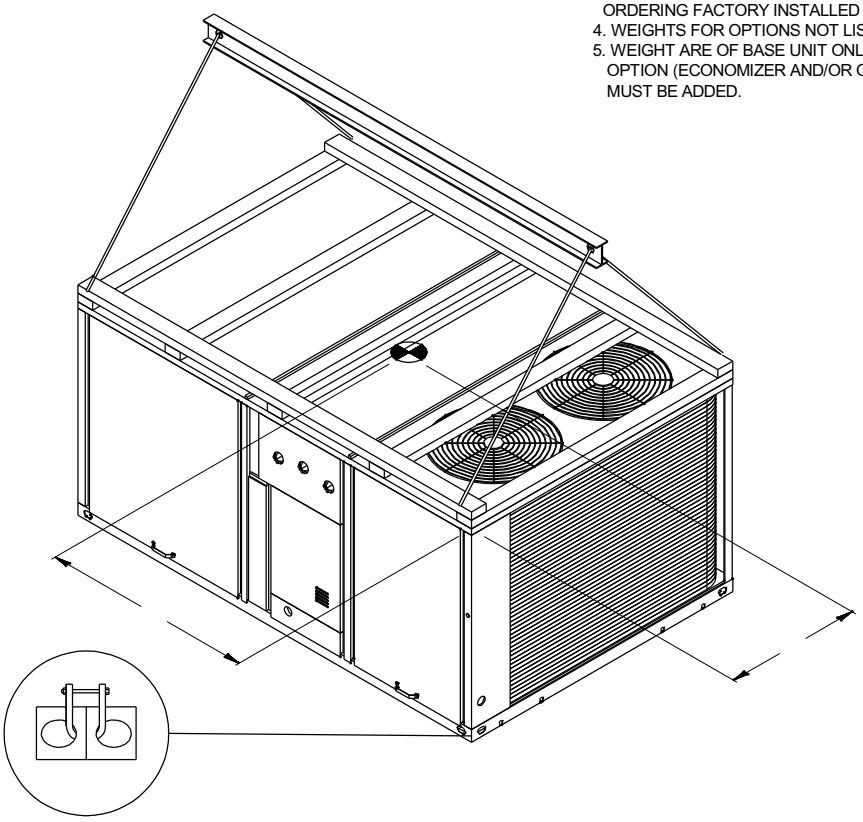

RIGGING AND CENTER OF GRAVITY

Accessory - Packaged Gas/Electric Rooftop Units
Item: A1 Qty: 1 Tag(s): RTU-1

RESURGAM CITY OF PORTLAND, MAINE
Reviewed for Code Compliance
Inspections Division
Approved with Conditions
Date: 06/10/16

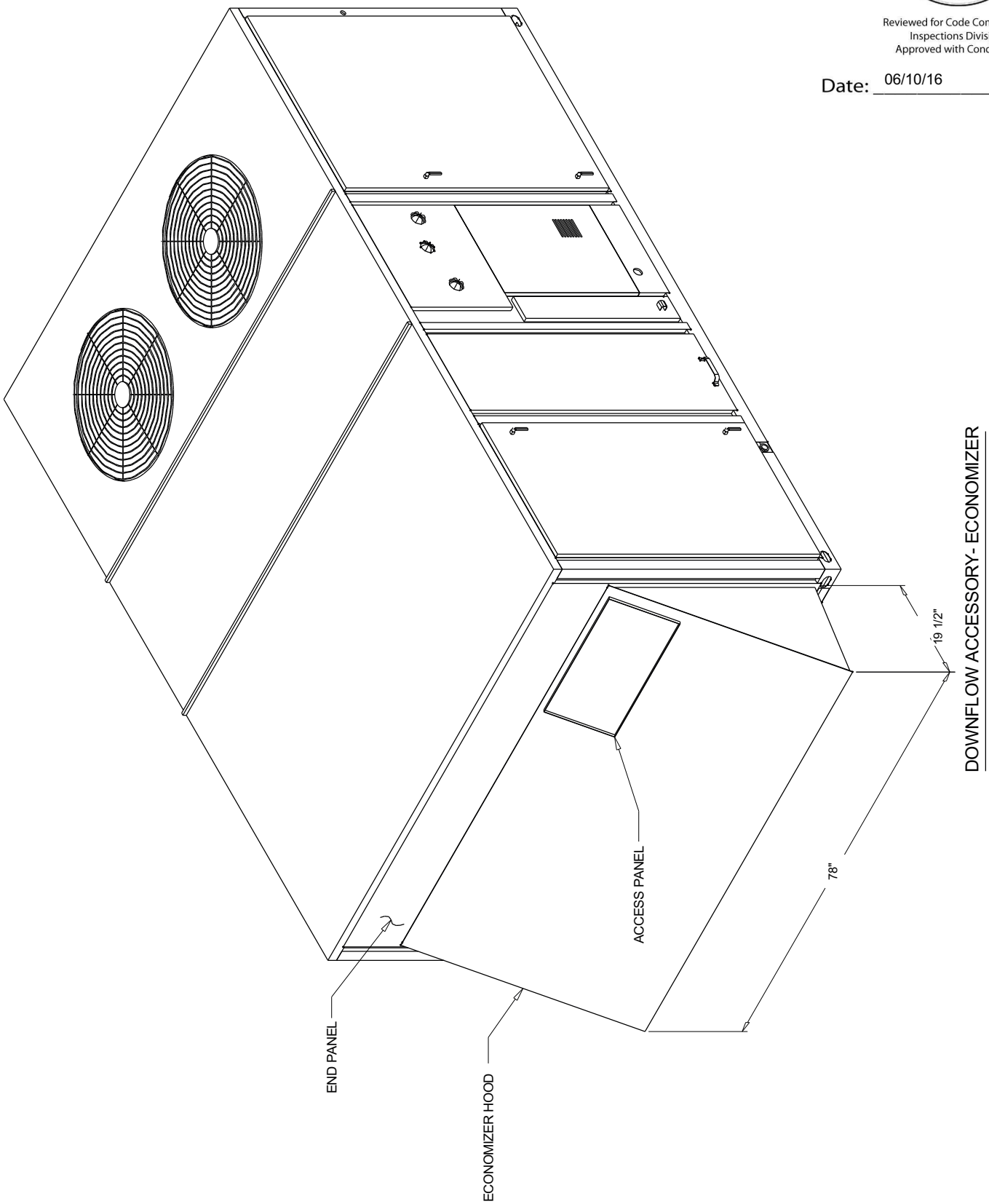

Accessory - Packaged Gas/Electric Rooftop Units
Item: A1 Qty: 1 Tag(s): RTU-1

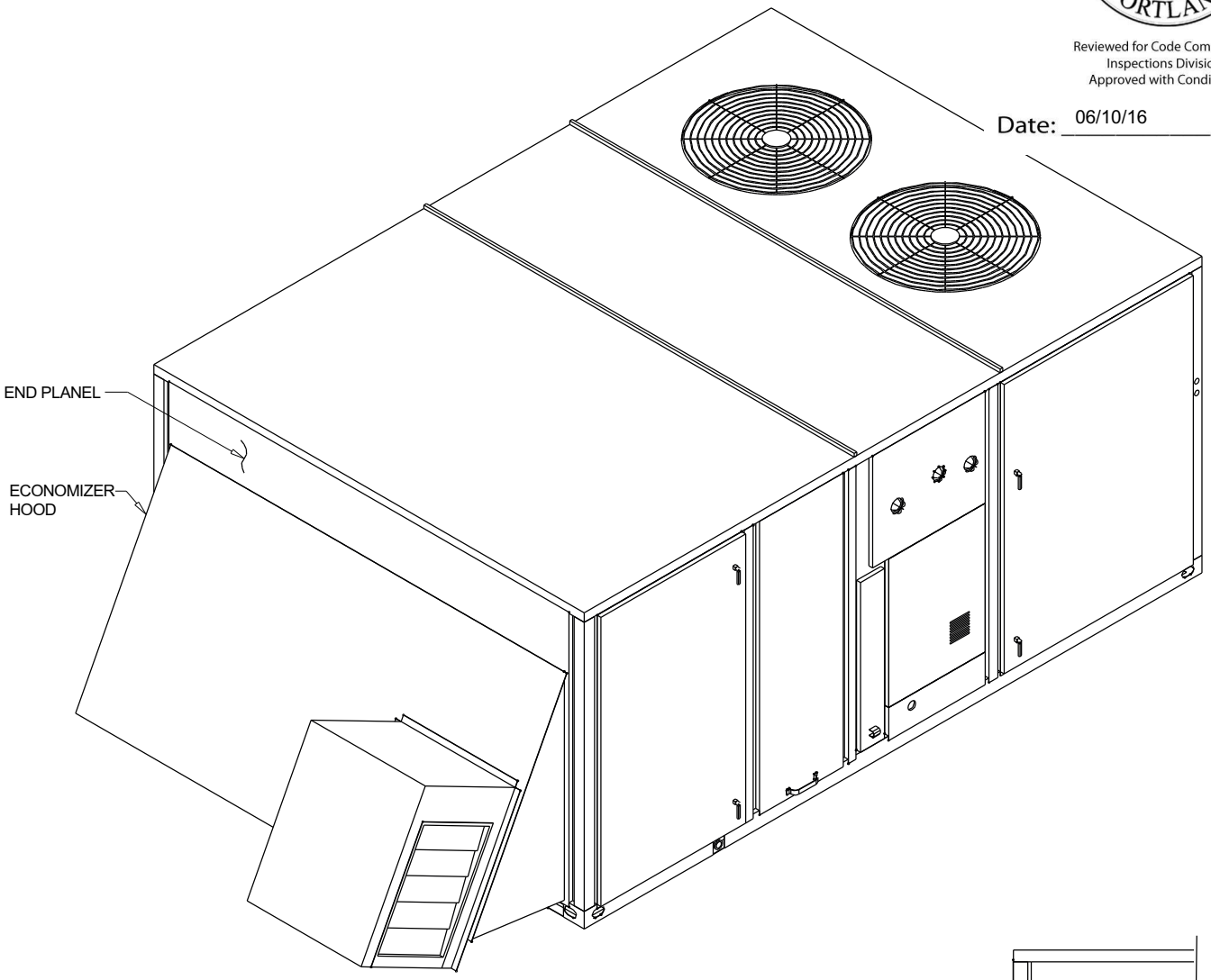

DOWNFLOW ACCESSORY- POWER EXHAUST

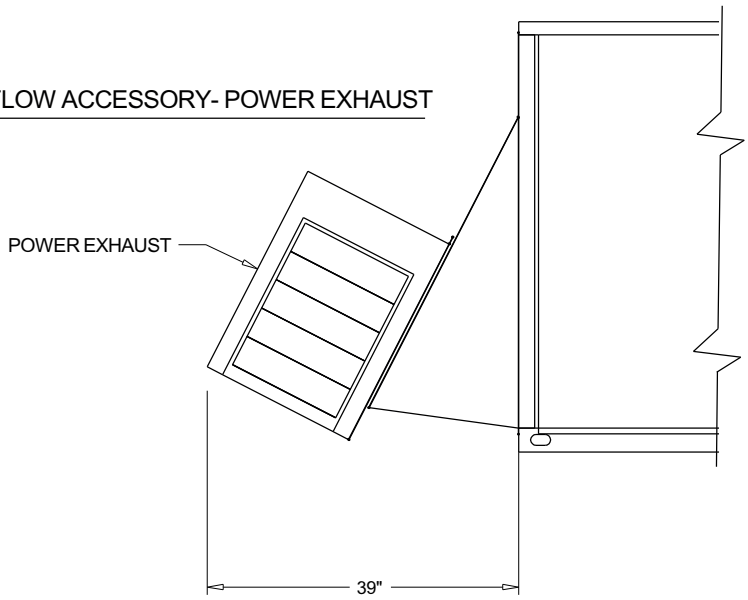

FROUNT OF POWER EXHAUST

RESURGAM CITY OF PORTLAND, MAINE
Reviewed for Code Compliance
Inspections Division
Approved with Conditions
Date: 06/10/16

Reviewed for Code Compliance
Inspections Division
Approved with Conditions

Date: 06/10/16

Field Installed Options - Part/Order Number Summary

This is a report to help you locate field installed options that arrive at the jobsite. This report pr
numbers for each field installed option, and references it to a specific product tag. It is NOT
material for the job.

Product Family - Packaged Gas/Electric Rooftop Units

Item	Tag(s)	Qty	Description	Model Number
A1	RTU-1	1	15 Ton VSD	YZD180F3RVB--HA1C2B60000000000000000000

Field Installed Option Description	Part/Ordering Number
Power exhaust	BAYPWRX029B