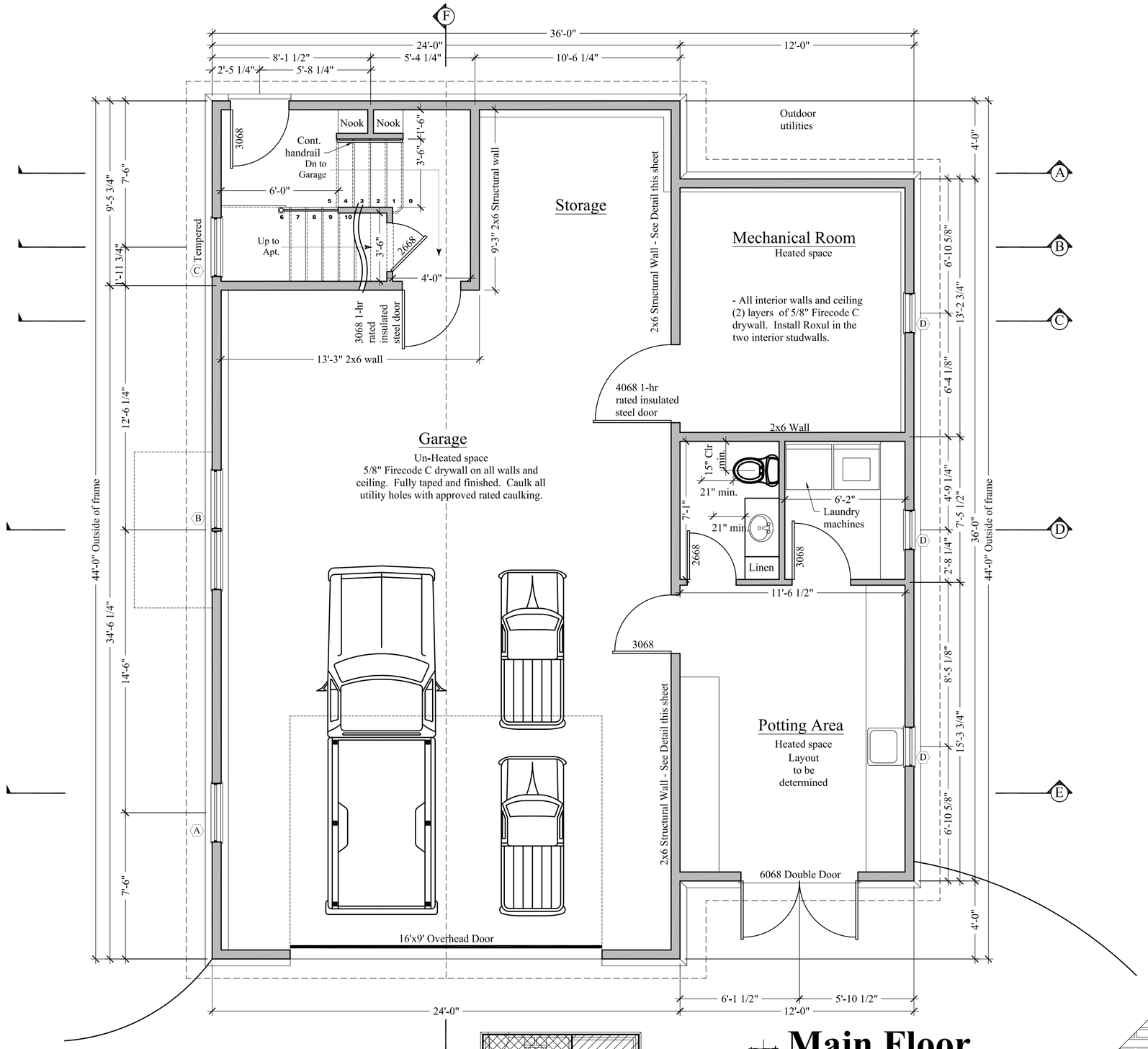

Main Floor
Scale 1/4" = 1'-0"

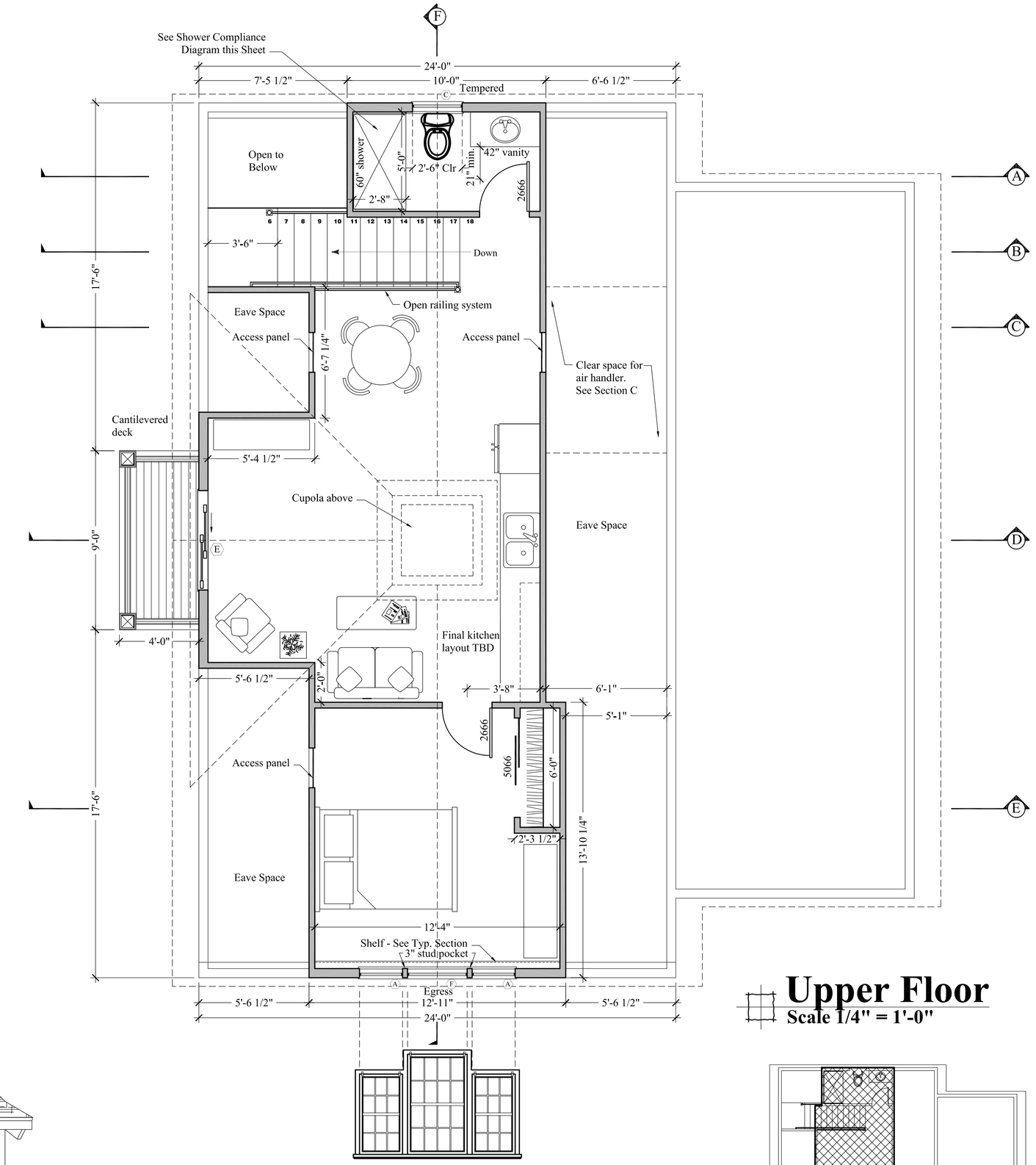

Upper Floor
Scale 1/4" = 1'-0"

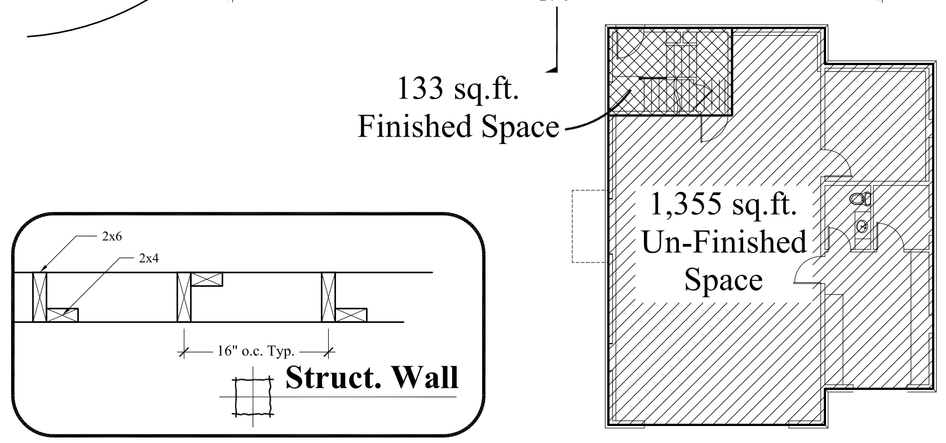

Struct. Wall

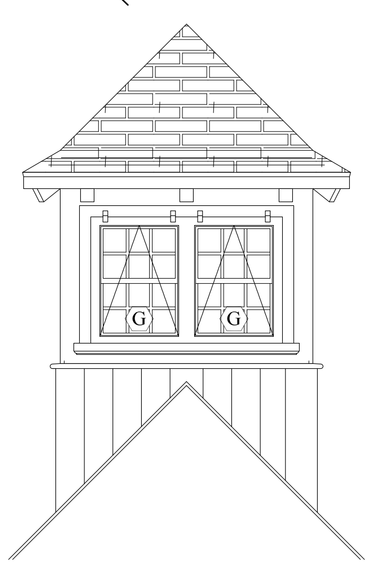

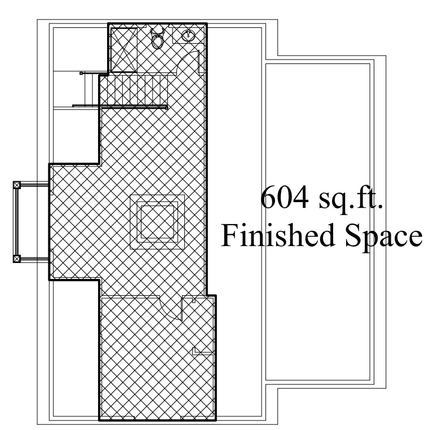

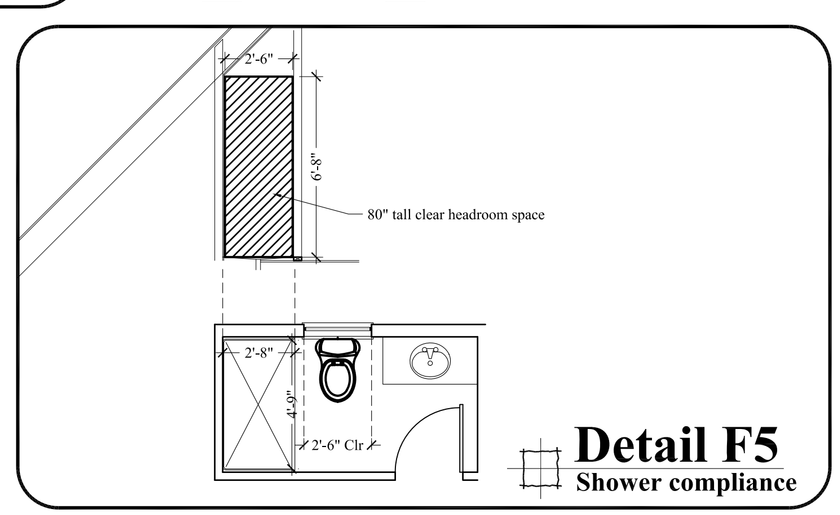

Detail F5
Shower compliance

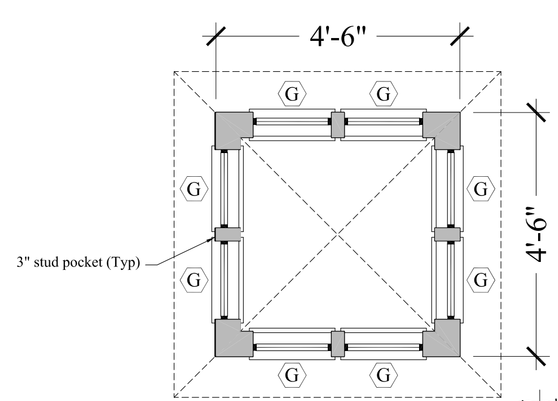

Cupola
Scale 1/2" = 1'-0"

FENESTRATION SCHEDULE

Andersen 200 Series - White exterior, match muntin details of Bldg #1 and Bldg #2, pattern as shown

	Model	TYPE	HEADER ELEVATION	REMARKS	U-Value
A	TW20310	Double Hung	6'-0" above top of foundation wall		.31
B	TW20310-2	Double Hung	6'-0" above top of foundation wall	Factory Mulled	.31
C	TW20310	Double Hung	6'-0" above top of foundation wall	Tempered Glass	.31
D	A21	Awning	3'-4 3/4" above top of foundation wall		.29
E	FWG5068L	Gliding Patio Door			.49
F	TW210410	Double Hung	6'-10" above top of subfloor	Egress unit	.31
G	AW12	Awning	See Section D, Same size as CR12, double hung style muntin pattern		.29

NOTE: SCALES SHOWN ON ALL DRAWINGS ARE APPLICABLE TO FULL-SIZE PRINTS (24x36) ONLY. OTHER PRINT SIZES ARE TO BE CONSIDERED "NOT TO SCALE"

- PLEASE DO NOT SCALE DRAWINGS - CONTACT ARCHITECT IF REQUIRED

Project North

NO.	DATE	DESCRIPTION

REVISIONS

CUSTOM CONCEPTS, INC.
ARCHITECTURE
383 U.S. ROUTE 1, SUITE 1a - SCARBOROUGH, MAINE 04074
Phone: (207) 883-0083 WWW.CUSTOMCONCEPTSINC.COM

PROJECT: House Island – New Energy Building & Caretoker's Residence JOB NUMBER: 9269-14
DRAWING TITLE: Main Floor & Upper Floor DRAWN BY: MER
OWNER APPROVAL: SCALE: As noted

☐ Preliminary Design ☐ Design Development ☑ Contract Documents

CLIENT REVIEW PRICING & ESTIMATING | CLIENT REVIEW PERMIT & CONSTRUCTION | FOR PERMITS, PRICING & CONSTRUCTION

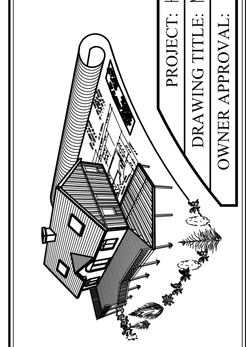

DATE: May 19, 2015

A1