# ROOM FINISH SCHEDULE

| RM NO. | ROOM NAME | WALLS | | FLOOR | BASE | CEILINGS | | REMARKS |
|---|---|---|---|---|---|---|---|---|
| | | MAT'L | FINISH | | | MAT'L | FINISH | |
| 100 | ENTRY PORCH | VERTICAL BOARDS | PAINT | WOOD DECKING | - | - | PAINT | . |
| 101 | LIVING | ETR | PAINT | ETR | ETR | ETR | PAINT | . |
| 102 | HALL | ETR / 5/8" GWB | PAINT | ETR - PATCH | ETR | ETR - PATCH | PAINT | . |
| 103 | FAMILY ROOM | ETR | PAINT | ETR | ETR | ETR | PAINT | . |
| 104 | BATH | ETR | PAINT | ETR | ETR | ETR | PAINT | . |
| 105 | STORAGE | ETR | PAINT | ETR | ETR | ETR | PAINT | . |
| 106 | LAUNDRY | ETR | PAINT | ETR | ETR | ETR | PAINT | . |
| 107 | BEDROOM | ETR / 5/8" GWB | PAINT | ETR - PATCH | ETR / 1x8 PAINTED | ETR - PATCH | PAINT | . |
| 108 | BATH | ETR / 5/8" GWB | PAINT | ETR - PATCH | ETR / 1x8 PAINTED | ETR - PATCH | PAINT | . |
| 109 | CLOSET | ETR / 5/8" GWB | PAINT | ETR - PATCH | ETR / 1x8 PAINTED | ETR - PATCH | PAINT | . |
| 110 | BEDROOM | ETR / 5/8" GWB | PAINT | ETR - PATCH | ETR / 1x8 PAINTED | ETR - PATCH | PAINT | . |
| 111 | CLOSET | ETR | PAINT | ETR | ETR | ETR | PAINT | . |
| 112 | CLOSET | ETR | PAINT | ETR | ETR | ETR | PAINT | . |
| 113 | MASTER BEDROOM | ETR / 5/8" GWB | PAINT | ETR / WOOD | ETR / 1x8 PAINTED | 5/8" GWB | PAINT | . |
| 114 | MASTER BATH | 5/8" GWB | PAINT | CT | CT | 5/8" GWB | PAINT | . |
| 115 | CLOSET | 5/8" GWB | PAINT | WOOD | 1x6 PAINTED | 5/8" GWB | PAINT | . |
| 116 | CLOSET | 5/8" GWB | PAINT | WOOD | 1x6 PAINTED | 5/8" GWB | PAINT | . |
| . | . | . | . | . | . | . | . | . |
| 200 | KITCHEN | ETR | PAINT | ETR | ETR | ETR | PAINT | . |
| 201 | ROOF DECK | ETR | - | ETR | - | - | - | . |
| 202 | SCREENED PORCH | WOOD, SCREENING | - | WOOD DECKING | - | - | PAINT | FINISH WOOD FOR WEATHER |
| 203 | DECK | - | - | WOOD DECKING | - | - | PAINT | FINISH WOOD FOR WEATHER |

## FINISH SCHEDULE ABBREVIATIONS

| | |
|---|---|
| C&E | CENTER AND EDGE BEAD |
| CT | CERAMIC TILE |
| GWB | GYPSUM WALL BOARD |
| GWB-X | TYPE 'X' GYPSUM WALL BOARD |
| N/A | NOT APPLICABLE |
| PTD | PAINTED |
| T&G | TONGUE AND GROOVE |
| CPT | CARPET |
| ETR | EXISTING TO REMAIN |
| WD | WOOD |

## HARDWARE ABBREVIATIONS

| | |
|---|---|
| DB | DEAD BOLT |
| DP | DOOR PULL |
| EL | ENTRY LOCK |
| PD | POCKET DOOR HARDWARE |
| PL | PRIVACY LOCK |
| PS | PASSAGE SET |
| SC | SCREEN DOOR HARDWARE |
| HK | HOOK |

# WINDOW SCHEDULE- MARVIN WOOD ULTREX SERIES

| TAG | MANUF. | MODEL # | TYPE | ROUGH OPENING | UNIT DIMENSIONS | REMARKS |
|---|---|---|---|---|---|---|
| A | WOOD ULTREX | (2) ITDH 3460 | (2) DH | 5'-8" X 5'-0 1/4" | 2'-9 1/2" X 4'-11 3/4" | (1) TO FIT EXISTING OPENING - OTHERS TO MATCH / FACTORY MULLED |
| B | WOOD ULTREX | ITDH 2240 | DH | 1'-10 1/2" X 3'-4 1/4" | 1'-9 1/2" X 3'-3 3/4" | - |
| C | WOOD ULTREX | ICA 12155 3W<br>(3) ICATR 2118 | CASE<br>(3) CASE TRAMSOM | 5'-1" X 8'-10 3/4" | 5'-0" X 4'-7 1/8"<br>(3) 1'-8" X 2'-3 1/8" | FACTORY MULLED |
| D | WOOD ULTREX | (2) ITDH 3036 | (2) DH | 5'-0" X 3'-0 1/4" | 2'-5 1/2" X 2'-11 3/4" | TO FIT EXISTING OPENING / FACTORY MULLED |
| E | WOOD ULTREX | ITDH 3036 | DH | 2'-6 1/2" X 3'-0 1/4" | 2'-5 1/2" X 2'-11 3/4" | - |
| F | WOOD ULTREX | (2) ITDH 2240 | (2) DH | 3'-8" X 3'-4 1/4" | 1'-9 1/2" X 3'-3 3/4" | FACTORY MULLED |
| G | WOOD ULTREX | (2) ITDH 3052 | (2) DH | 5'-0" X 4'-4 1/4" | 2'-5 1/2" X 4'-3 3/4" | FACTORY MULLED |
| H | WOOD ULTREX | ITDH 2648 | DH | 2'-2 1/2" X 4'-0 1/4" | 2'-1 1/2" X 3'-11 3/4" | - |
| J | WOOD ULTREX | IAWN 2523 | AWN | 2'-1" X 1'-11 5/8" | 2'-0" X 1'-11 1/8" | - |
| K | WOOD ULTREX | ITDH 4268 | DH | 3'-6 1/2" X 5'-8 1/4" | 3'-5 1/2" X 5'-7 3/4" | TO FIT EXISTING OPENING |
| L | WOOD ULTREX | ICA 2135 2W | CASE | 3'-5" X 2'-11 5/8" | 3'-4" X 2'-11 1/8" | TO FIT EXISTING OPENING |
| | | | | | | |

## GENERAL WINDOW NOTES

1. INTENT IS FOR ALL GLAZING TO BE A MINIMUM OF 18" A.F.F. VERIFY TEMPERED GLASS REQ'S. W/ HEAD HEIGHTS
2. VERIFY JAMB EXTENSION REQUIREMENTS W/ BLDG. SECTIONS AND FIELD CONDITIONS
3. INSECT SCREENS FOR ALL OPERABLE UNITS, UNLESS NOTED OTHERWISE. PROVIDE FULL SCREENS ON ALL DOUBLE HUNG WINDOWS, U.N.O.
4. LOW E INSULATING GLASS, W/ ARGON UNLESS NOTED OTHERWISE.
5. WINDOW SIZES AND ROUGH OPENINGS ARE BASED ON STANDARD SIZES OF MARVIN WOOD-ULTREX SERIES.
6. CONTRACTOR TO VERIFY ROUGH OPENINGS WITH WINDOW MANUFACTURER PRIOR TO CONSTRUCTION
7. ALL WINDOWS TO HAVE BITUTHENE FLASHING, FULLY ADHERED AS SHOWN IN DETAIL X/AX.X.
8. SIMULATED DIVIDED LIGHTS WITH 7/8" MUNTINS (STANDARD SIZE) IN PATTERNS AS INDICATED ON ELEVATIONS, SHEETS A2.1 & A2.2
9. ALL EXISTING WINDOW OPENING SIZES TO BE FIELD VERIFIED.

## WINDOW KEY

| | |
|---|---|
| DH | DOUBLE HUNG |
| CASE | CASEMENT |
| AWN | AWNING |

## WINDOW TYPE ELEVATIONS

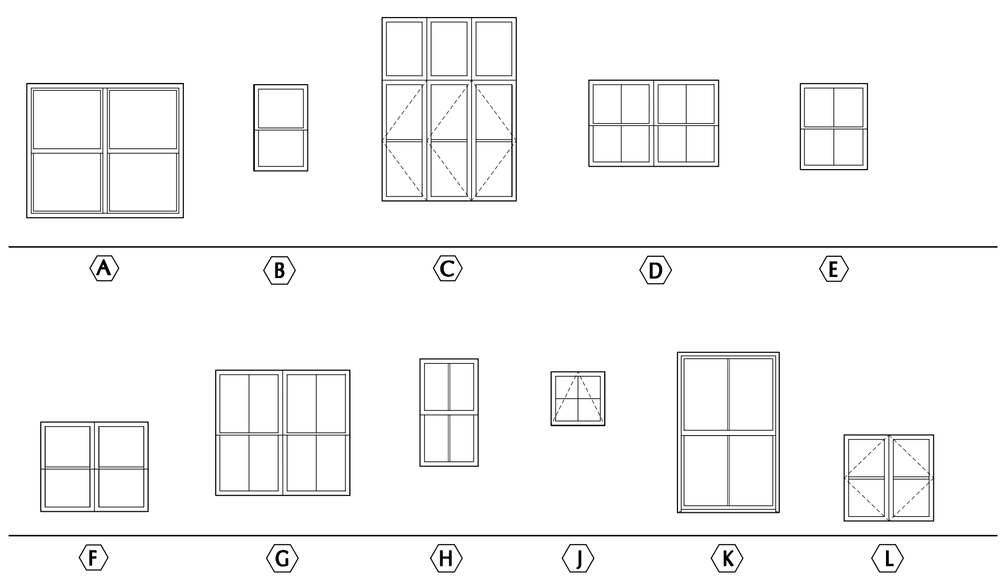


# DOOR SCHEDULE

| NUMBER | TYPE | WIDTH | HEIGHT | MATERIAL | INSULATED | WEATHERSTRIP | THRESHOLD | HARDWARE | REMARKS |
|---|---|---|---|---|---|---|---|---|---|
| 107.1 | A | . | . | . | . | . | . | . | TO MATCH EXISTING |
| 108.1 | A | . | . | . | . | . | . | . | TO MATCH EXISTING |
| 109.1 | A | . | . | . | . | . | . | . | TO MATCH EXISTING |
| 114.1 | A | . | . | . | . | . | . | . | TO MATCH EXISTING |
| 115.1 | A | . | . | . | . | . | . | . | TO MATCH EXISTING |
| 116.1 | A | . | . | . | . | . | . | . | TO MATCH EXISTING |
| . | . | . | . | . | . | . | . | . | . |
| 200.1 | . | B | . | . | Y | Y | Y | . | . |
| 202.1 | . | C | . | . | . | . | . | . | . |
| 203.1 | . | C | . | . | . | . | . | . | . |
| . | . | . | . | . | . | . | . | . | . |
| . | . | . | . | . | . | . | . | . | . |
| . | . | . | . | . | . | . | . | . | . |
| . | . | . | . | . | . | . | . | . | . |
| | | | | | | | | | |

## DOOR NOTES

1. CONTRACTOR TO SUBMIT DOOR ORDER TO ARCHITECT FOR FINAL REVIEW AND COORDINATION BEFORE PURCHASING DOORS.
2. SCREEN DOORS ARE NOT SHOWN ON ELEVATIONS BUT ARE LISTED IN DOOR SCHEDULE.
3. ALL BROSCO EXTERIOR DOORS SHALL HAVE COMPOSITE THRESHOLDS.
4. REFER TO FLOOR PLANS FOR HANDING

## DOOR ELEVATIONS

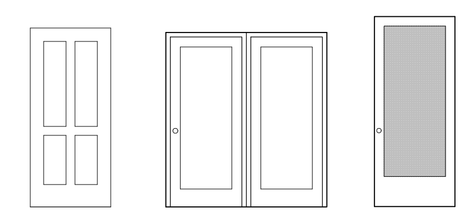

A — TO MATCH EXISTING

B — FRENCH DOORS

C — SCREEN PORCH DOOR

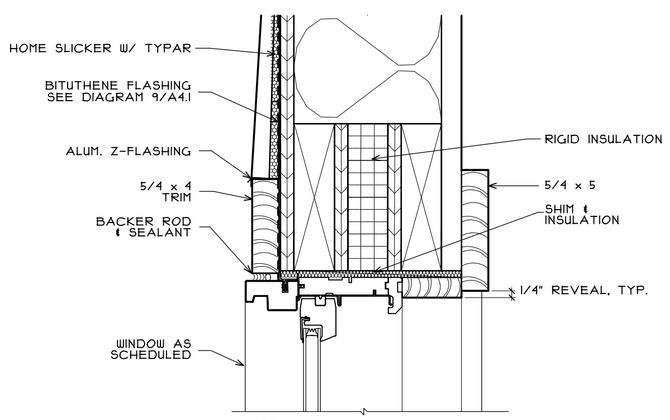


1 / A4.1 TYP. HEAD DETAIL
SCALE: 3" = 1'-0"

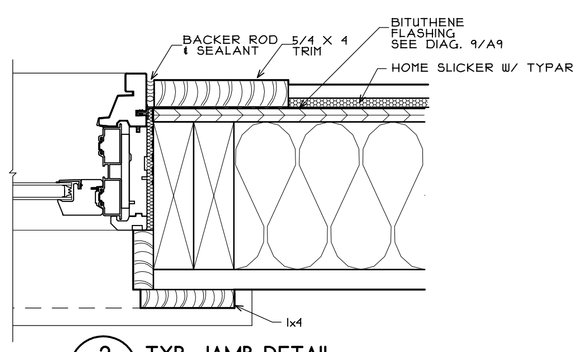


2 / A4.1 TYP. JAMB DETAIL
SCALE: 3" = 1'-0"

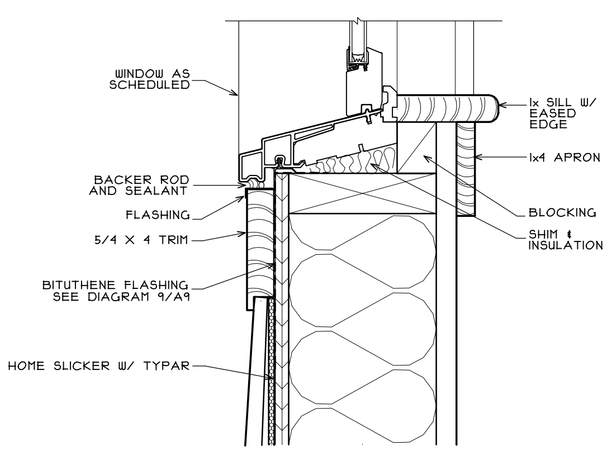


3 / A4.1 TYP. SILL DETAIL
SCALE: 3" = 1'-0"

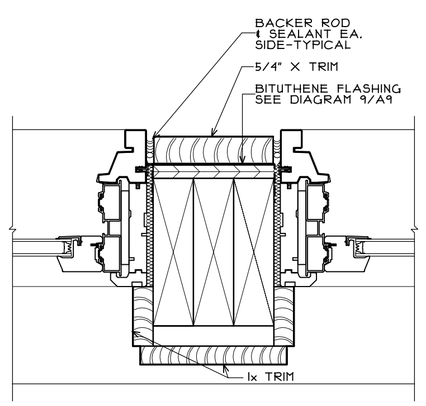


4 / A4.1 SUPPORT MULLION
SCALE: 3" = 1'-0"

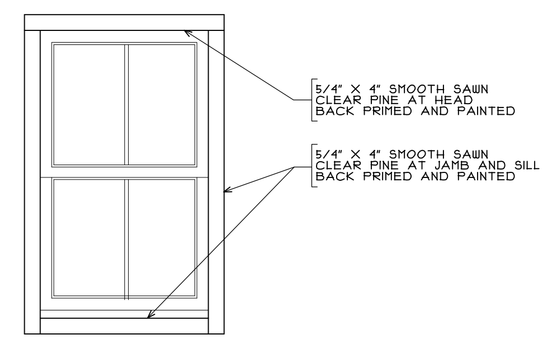


5 / A4.1 EXT. WINDOW TRIM DTL
SCALE: 1/2" = 1'-0"

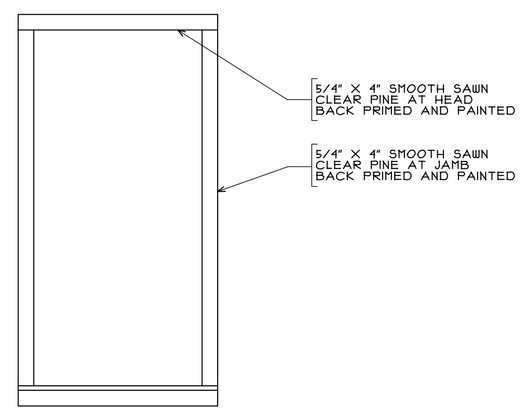


6 / A4.1 EXT. DOOR TRIM DTL
SCALE: 1/2" = 1'-0"

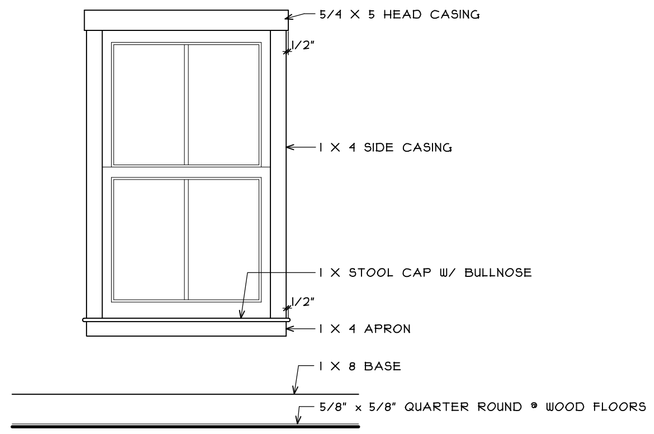


7 / A4.1 INT. WINDOW TRIM DTL.
SCALE: 1/2" = 1'-0"

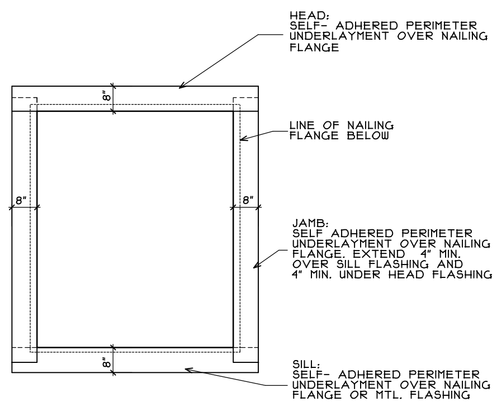


9 / A4.1 WINDOW FLASHING DIAGRAM
NOT TO SCALE

# COLESWORTHY COTTAGE

ADDITIONS & RENOVATIONS

CLIFF ISLAND
MAINE

Revisions


Stephen Blatt Architects

10 Danforth Street
Post Office Box 583 DTS
Portland, Maine 04112-0583
Voice: 207.761.5911
Fax: 207.761.2105
Email: sba@sbarchitects.com


REGISTERED ARCHITECT
STEPHEN J. BLATT
No. 858
STATE OF MAINE

Consultants

Landscape Architect
Carroll Associates

Structural Engineer
Pinkham & Greer

| | |
|---|---|
| Job No.: | 08.13 |
| Date: | June 17, 2009 |
| Scale: | 1/4" = 1'-0" |
| Drawn by: | CR, DWB |
| Checked by: | DWB |

Drawing Title:
SCHEDULES
DETAILS

A4.1

PERMIT SET

6/17/2009

J:\Coleworthy Drawings\07-08\13_Schedules