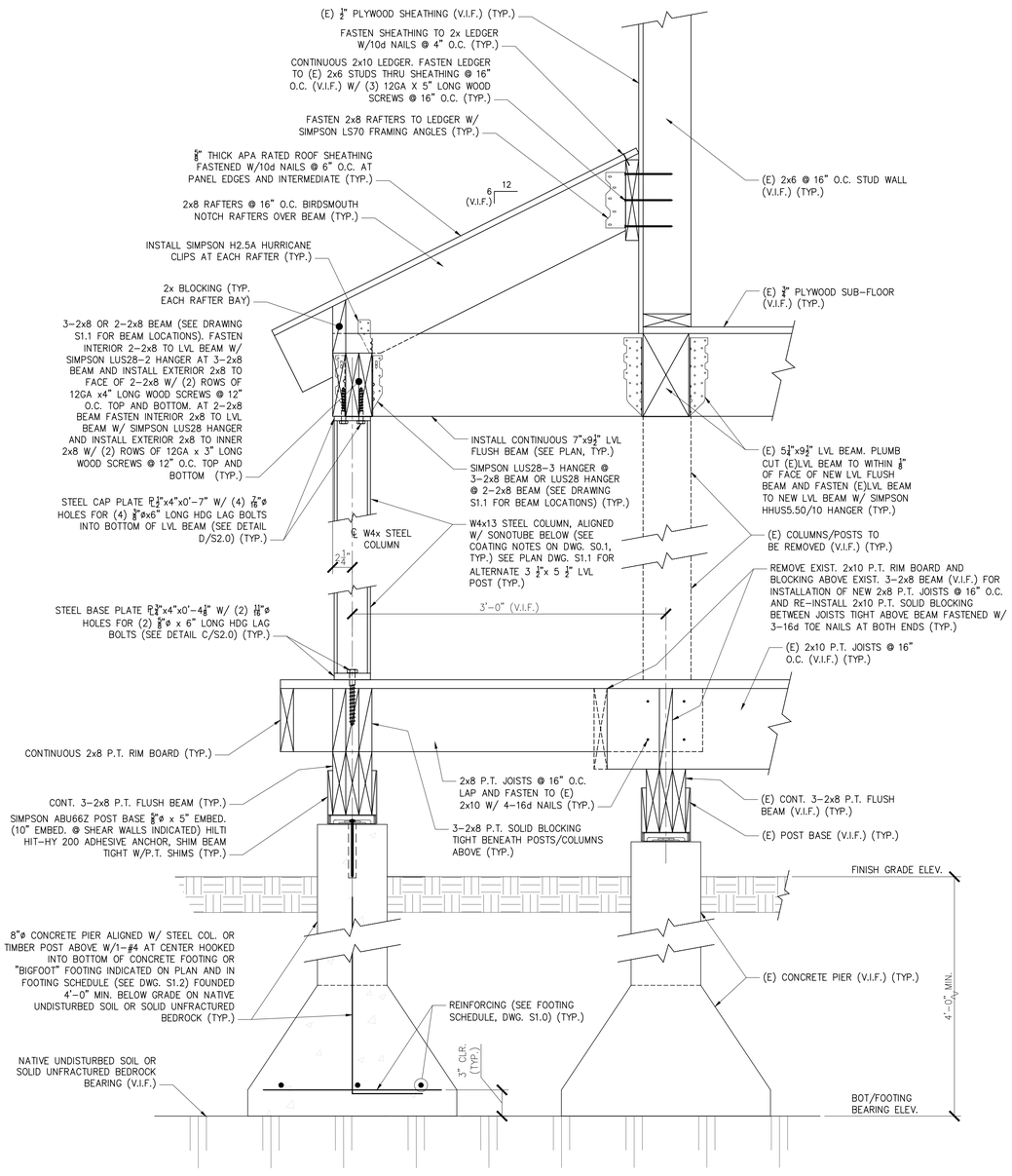

SECTION 1 / S2.0 — 1 1/2" = 1'-0"
S1.1
S1.2

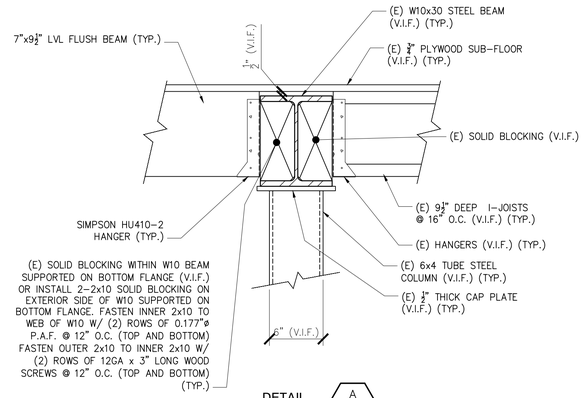

DETAIL A / S2.0 — 1 1/2" = 1'-0"

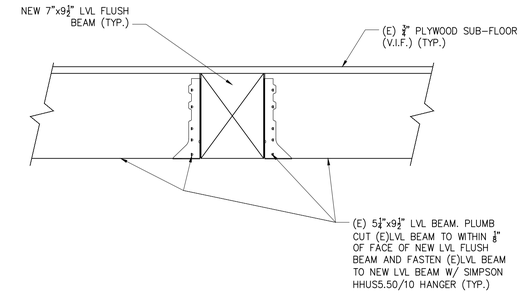

DETAIL B / S2.0 — 1 1/2" = 1'-0"

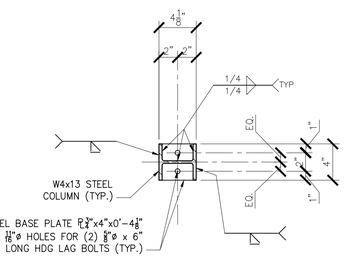

BASE PLATE DETAIL C / S2.0 — 1 1/2" = 1'-0"

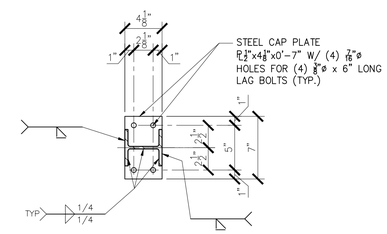

CAP PLATE DETAIL D / S2.0 — 1 1/2" = 1'-0"

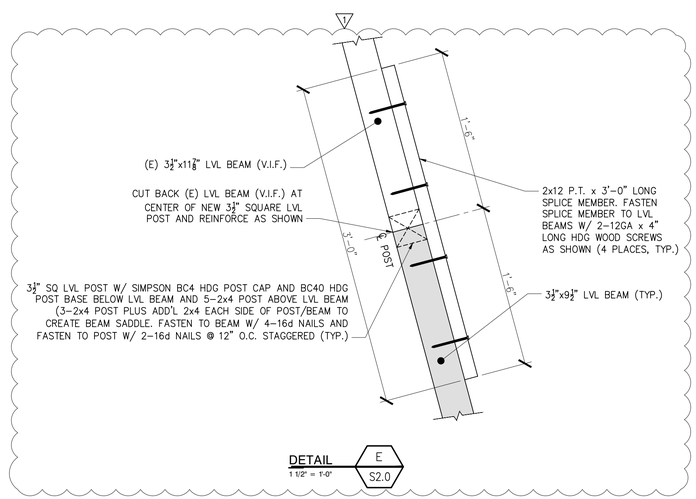

DETAIL E / S2.0 — 1 1/2" = 1'-0"

THESE DRAWINGS HAVE BEEN DEVELOPED BY L&L STRUCTURAL ENGINEERING SERVICES, INC. FOR THE THE TITLED SET ONLY. THE DRAWINGS ARE THE SOLE PROPERTY OF L&L ENGINEERING SERVICES, INC. AND THEY SHALL NOT BE USED, LENT, COPIED OR ALTERED WITHOUT THE WRITTEN CONSENT OF L&L STRUCTURAL ENGINEERING SERVICES, INC.

L & L STRUCTURAL
ENGINEERING SERVICES, INC.
SIX Q STREET
SOUTH PORTLAND, MAINE 04106
PHONE: (207) 767-4830
FAX: (207) 799-5432
EMAIL: JLEASURE@L-ENG.COM

STATE OF MAINE — JOSEPH H. LEASURE No. 6242 — LICENSED PROFESSIONAL ENGINEER

Reviewed for Code Compliance Inspections Division Approved as Noted
Date: 02/09/18

rev.	date	description	appr'd
A	04/12/17	FOR PERMIT & COORD.	JHL
0	06/30/17	FOR CONSTRUCTION	JHL
1	11/02/17	GENERAL REVISIONS	JHL

designed by: JHL
drawn by: PJM
checked by: JHL
scale: AS NOTED
date: 04/12/2017
plot date: 11/02/2017
project # 2015-150

KLAUBER-SPEIDEN RESIDENCE
SHORE ROAD
CUSHINGS ISLAND, PORTLAND MAINE
STRUCTURAL RENOVATIONS AND ADDITIONS
SECTIONS AND DETAILS

S2.0