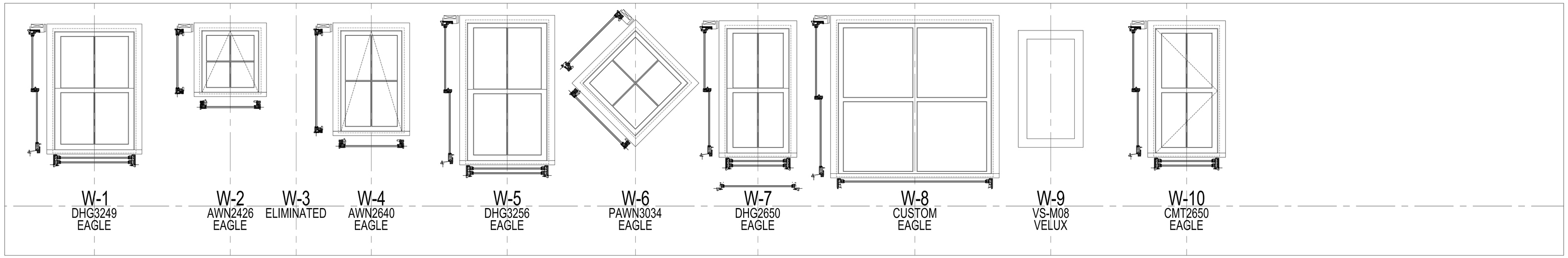

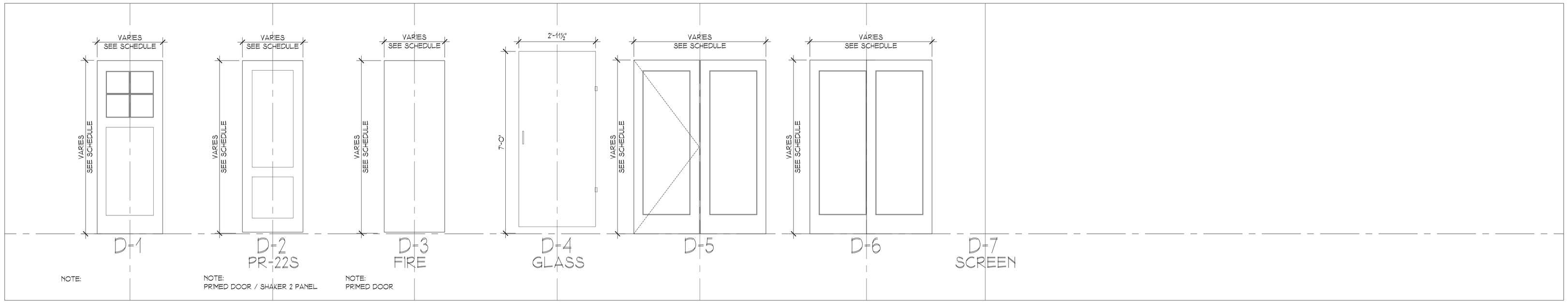

D O O R S C H E D U L E

	GENERAL INFO				DOOR INFO								SILL	TRIM INFO		HARDWARE INFO			
	ID	ROOM	MANUF.	MODEL	TYPE	MAT.	WIDTH	HEIGHT	THK	HAND	GLAZ.	R.O.	TYPE	INT.	EXT.	TYPE	PASSAGE	PRIVACY	
GROUND	001A	ENTRY	THERMATRU	---	D-1	WD/GL	3'-0"	6'-8"	1 ¾"	RH	INSUL	3'-2½" x 6'-10½"	ALUM	¾" x 3"	5/4" x 4" PVC		-	X	
	001B	CLOSET	LEMIEUX	PR-22S	D-2	WOOD	2'-4"	6'-8"	1⅜"	RH	-	2'-6½" x 6'-10½"	-	¾" x 3"	¾" x 3"		X	-	
	001C	MASTER	LEMIEUX	PR-22S	D-2	WOOD	2'-6"	6'-8"	1⅜"	RH	-	2'-8½" x 6'-10½"	-	¾" x 3"	¾" x 3"		X	-	
	002	SITTING	LORANGER	---	D-3	FIBERGL.	3'-0"	6'-8"	1 ¾"	RH	-	3'-2½" x 6'-10½"	ALUM	¾" x 3"	5/4" x 4" PVC		-	X	OPTION TO USE EXIST AT EXIST LOCATION
	004A	MASTER	REUSE EXIST														-	X	REUSE FROM KITCHEN AT FIRST FLOOR
	004B	M.CLOSET	LEMIEUX	PR-22S	D-2	WOOD	2'-6"	6'-8"	1⅜"	LH	-	2'-8½" x 6'-10½"	FLUSH	¾" x 3"	¾" x 3"		-	-	
	006A	BATH	LEMIEUX	PR-22S	D-2	WOOD	2'-6"	6'-8"	1⅜"	LH	-	2'-8½" x 6'-10½"	FLUSH	¾" x 3"	¾" x 3"		-	X	
	006B	SHOWER			D-4	GLASS	VIF				⅜"								
	007A	MECH.	LEMIEUX	PR-22S	D-2	WOOD	2'-6"	6'-8"	1⅜"	RH	-	2'-8½" x 6'-10½"	FLUSH	¾" x 3"	¾" x 3"		X	-	
	007B	EXIST			D-3		3'-8"			LH	-	-	-	-	5/4" x 4" PVC		-	X	REDUCE AS NEC. FOR BATHROOM LAYOUT

	GENERAL INFO				DOOR INFO								SILL	TRIM INFO		HARDWARE INFO			
	ID	ROOM	MANUF.	MODEL	TYPE	MAT.	WIDTH	HEIGHT	THK	HAND	GLAZ.	R.O.	TYPE	INT.	EXT.	TYPE	PASSAGE	PRIVACY	
FIRST	101	DECK	EAGLE	HPI60610ASR	D-5	WD/GL	6'-0"	6'-10"	1 ¾"	POST	INSUL	6'-0¼" x 6'-10½"	ALUM	¾" x 3"	5/4" x 4" PVC		-	X	
	106A	TV	LEMIEUX	PR-22S	D-2	WOOD	2'-8"	6'-8"	1⅜"	PKT	-	2'-10½" x 6'-10½"	-	¾" x 3"	¾" x 3"		X	-	
	106B	W.C.	LEMIEUX	PR-22S	D-2	WOOD	2'-4"	6'-8"	1⅜"	RH	-	2'-6½" x 6'-10½"	-	¾" x 3"	¾" x 3"		-	X	
	107	LAUNDRY	LEMIEUX	PR-22S	D-2	WOOD	2'-8"	6'-8"	1⅜"	RH	-	2'-10½" x 6'-10½"	-	¾" x 3"	¾" x 3"		X	-	

	GENERAL INFO				DOOR INFO								SILL	TRIM INFO		HARDWARE INFO			
	ID	ROOM	MANUF.	MODEL	TYPE	MAT.	WIDTH	HEIGHT	THK	HAND	GLAZ.	R.O.	TYPE	INT.	EXT.	TYPE	PASSAGE	PRIVACY	
SCN	201A	DECK	EAGLE	GP6068LS	D-6	WD/GL	6'-0"	6'-8"	1 ¾"	SLDR	INSUL	6'-0¼" x 6'-8½"	ALUM	¾" x 3"	5/4" x 4" PVC		-	X	
	201B	ELIM																	
	201C	ELIM																	
	201D	BED	LEMIEUX	PR-22S	D-2	WOOD	2'-6"	6'-8"	1⅜"	RH	-	2'-8½" x 6'-10½"	-	¾" x 3"	¾" x 3"		-	X	
	204	LINEN	LEMIEUX	PR-22S	D-2	WOOD	2'-6"	6'-8"	1⅜"	LH	-	2'-8½" x 6'-10½"	-	¾" x 3"	¾" x 3"		-	X	
	205	BATH	LEMIEUX	PR-22S	D-2	WOOD	2'-6"	6'-8"	1⅜"	RH	-	2'-8½" x 6'-10½"	-	¾" x 3"	¾" x 3"		-	X	
	207A	BED	LEMIEUX	PR-22S	D-2	WOOD	2'-6"	6'-8"	1⅜"	RH	-	2'-8½" x 6'-10½"	-	¾" x 3"	¾" x 3"		-	X	

Eider Investments, Inc.
258 Black Point Road, Scarborough, ME 04074
207.883.0157 • 207.883.8202

SERAICHICK RESIDENCE
668 SEASHORE AVENUE
PEAKS ISLAND, MAINE

Sheet* A8.2 of TK
Title
Proj# D0-006 Dwgs MAR 17 Dwn TLW Chkd TLW
Date
Seq E017 Date
Lot 083 Revisions
Not As Noted