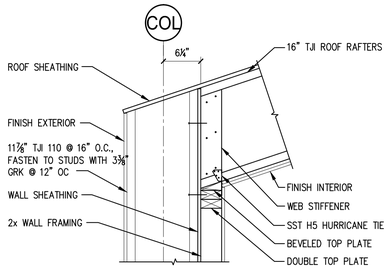

1 SECTION
1" = 1'-0"

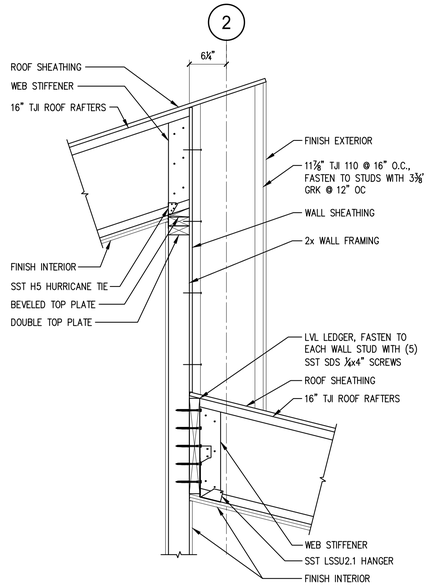

2 SECTION
1" = 1'-0"

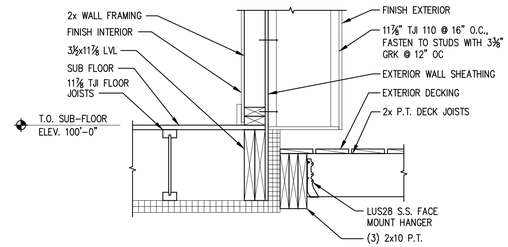

3 SECTION
1" = 1'-0"

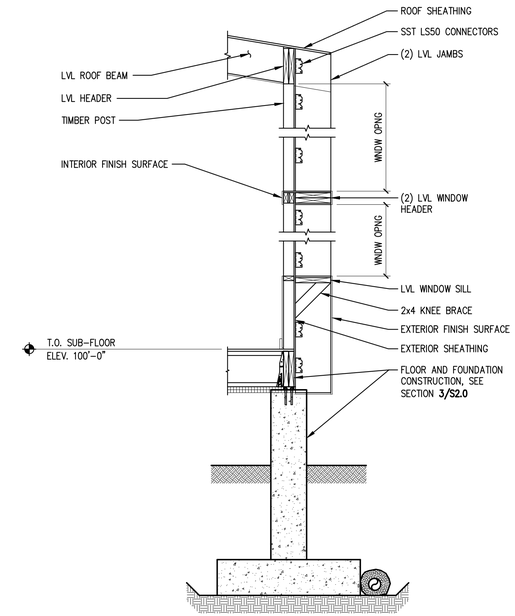

4 SECTION
1/2" = 1'-0"

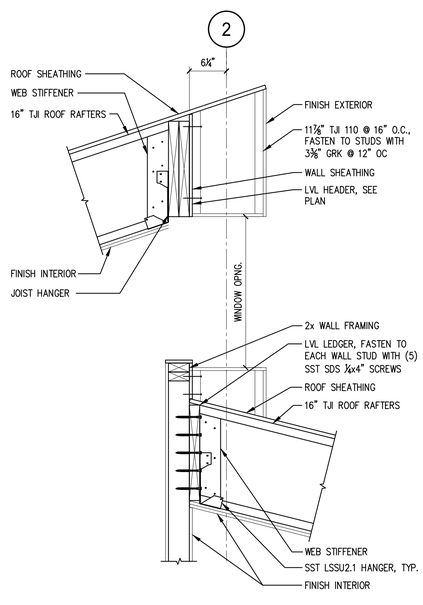

5 SECTION
1" = 1'-0"

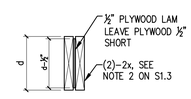

NOTE:
1. PROVIDE # OF FULL HEIGHT KING STUDS ON EACH SIDE OF OPENING TO MATCH ½ OF INTERRUPTED STUDS @ WALL OPENING. MINIMUM (2) FULL HEIGHT KING STUDS @ EACH SIDE OF OPENING.
2. ALL HEADERS SUPPORTED BY MINIMUM OF (1) JACK STUD.
3. WINDOW SILL PLATES MINIMUM (2)-2x6 ON THE FLAT.

TYPICAL DOOR/WINDOW HEADER DETAIL
SCALE: NTS

PRINTED: Jun 22, 2016

CASCO BAY ENGINEERING
424 Fore Street
Portland, ME 04101
Phone 207.842.2800
Fax 207.842.2828
www.cascobayengineering.com

CLIENT:
KAPLAN THOMPSON ARCHITECTS
102 EXCHANGE STREET, 2nd FLOOR
PORTLAND, MAINE 04101

STATE OF MAINE
PETER D. RAND
No. 9714
LICENSED PROFESSIONAL ENGINEER
6-22-16

STENZEL - WALSH
PEAKS ISLAND
PORTLAND, MAINE
NEW RESIDENCE

ISSUED

No.	DESCRIPTION	DR. BY	CKD. BY	DATE
A	ISSUED FOR PERMIT	PR		4-1-16
B	ISSUED FOR PRICING	PR		5-26-16
C	GENERAL REVISIONS	PR		6-8-16
0	ISSUED FOR CONSTRUCTION	PR		6-22-16

SHEET TITLE:
FRAMING DETAILS

DESIGNED:	PR
DRAWN:	PR
DATE:	03-29-16
PROJECT NUMBER:	16-010

S3.0